FIRE PROTECTION EVALUATION

Tacoma LNG Facility
Port of Tacoma, Washington

CONTAINS CRITICAL ENERGY INFRASTRUCTURE INFORMATION
DO NOT RELEASE

Project: Tacoma LNG Facility	Owner: Puget Sound Energy				
Owner Contract Number:	Owner Document Number:				
Engineering Supervisor:	Rev	A	B		
Name: M.E. Stobart	Made By:	MES	MES		
Telephone: (815) 439-6090	Date:	02/12/15	06/30/15		
Fax: (815) 439-6011	Checked By:		GCB		
Location: Plainfield, Illinois USA	Date:		07/8/15		
	Purch. Action:				
	Date:				
filename: h:\project\186512 - tacoma\2015 onward\05 engineering\5.01 process design\tacoma lng - preliminary fire protection evaluation.doc					

TABLE OF CONTENTS

1 GENERAL

1.1 Introduction

Puget Sound Energy, Inc (PSE) has contracted Chicago Bridge and Iron Company (CB&I) to conduct a Fire Protection Evaluation for the proposed LNG storage facility.

The Tacoma LNG facility in the Port of Tacoma, Washington will accept delivery of natural gas from customers that will provide gas to the Project from a single pipeline. The facility will liquefy the gas using a mixed refrigerant (MR) liquefaction system, store the liquefied gas in an 8 million gallon full-containment (concrete outer) tank, transfer LNG to a marine dock for bunkering to ships or barges, transfer LNG to trucks, and vaporize the gas to send-out to the pipeline during periods of high demand. The project includes the construction of one 8 million gallon storage tank, a 250,000 gallon per day liquefaction system, a 66 decatherms per day vaporization system, and dual truck loading bays at 300 gallons per minute loading rate at each bay.

1.2 Scope

This Fire Protection Evaluation considers the origins and potential effects fire could have on the Tacoma LNG facility and its personnel, and considers what could occur with respect to the operating process within the facility. This study also outlines the various hazard detection and fire fighting systems used to mitigate these fire hazards, and the basis behind their implementation.

In this study, the requirements of NFPA 59A (2001 and 2006) “Standard for the Production, Storage, and Handling of Liquefied Natural Gas (LNG)” as referenced in the U.S. Code of Federal Regulations, 49CFR193 (2013), “Liquefied Natural Gas Facilities: Federal Safety Standards”, are followed.

Hazard modeling based on the facility design has been produced for thermal radiation and vapor dispersion exclusion zones that are governed by the rules of 49CFR193. The resulting thermal radiation exclusion zones are shown on drawing 186512-000-PI-01-000011. The resulting vapor dispersion exclusion zones are shown in the Siting Report (186512-000-SE-RP-00001). The layout of the storage tanks, piping systems, vaporizers, buildings, process equipment and other structures, and equipment that constitute the Gas Storage Facility meet the spacing criteria of NFPA 59A.

2 PRINCIPAL FIRE HAZARDS ASSOCIATED WITH NATURAL GAS

2.1 Liquefied Natural Gas Hazards

Release of cryogenic or low temperature liquid due to spills, leaks, or intentional draining can expose facility personnel to fire hazards (among other hazards such as asphyxiation and cold burns).

Natural gas has low reactivity and low burning speed. Because of its narrow flammability range, unconfined clouds of natural gas generated by an outdoor leak or liquefied natural gas spill present little danger of explosion. Natural gas is lighter than air, and quickly dilutes beyond the lean flammability limit and floats away. If ignition should occur, burning will take place only along the air/gas interface in which flammability requirements are met. Flame speeds in unconfined natural gas clouds (about 1 foot/second) are far below those that would produce dangerous overpressure. A flash or detonation is very unlikely.

Natural gas presents the greatest safety risk when gas leaks or liquefied natural gas spills occur in confined areas. Confinement, such as in an enclosed compressor building, allows local flammable vapor clouds to form and increases the possibility of ignition and the risk of localized damage. Once ignited, pressure will build in an enclosed area. However, flame speeds decelerate rapidly beyond the boundaries of the confinement and limit the extent of potential damage and injuries. The risk of explosion in a confined space is minimized by providing good ventilation in structures that can contain natural gas. Ventilation allows the naturally rising gas to escape and dilute beyond flammability.

Cryogenic (e.g. liquefied natural gas) hydrocarbon liquids in the facility boil at sub-zero temperatures when released to the atmosphere. The rate of boiling is rapid initially, but decreases as the surfaces in contact with the liquid cool.

The evolved gas mixes with air to form three types of mixtures:

- Near the surface of the liquid, the mixture of gas and air will be too rich in hydrocarbon gas to burn.
- A distance away from the liquid surface the mixture of gas and air will be too lean in hydrocarbon vapor to burn.
- Between these two nonflammable mixtures, there is a flammable air-gas mixture. The flammable range of natural gas in air is approximately 5.0 to 15.0 % by volume. Ignition of this mixture will result in a flame, which travels to the source of the gas. Released gas is only safe from ignition after it has passed through the first two mixtures into the third mixture, which is too deficient (lean) in natural gas to burn.

Atmospheric water vapor will condense to form a white cloud as the air and cold gas mix. The flammable air-gas mixture can exist inside or outside of the cloud. Explosion, fire, and thermal radiation hazards will exist due to this flammable air-gas mixture.

For liquefied natural gas, this cloud will be heavier than air at temperatures of -160ºF (-107°C) or lower and will tend to spread out laterally along the ground rather than rise vertically. As the cloud warms above -160ºF (-107°C), its density becomes less than that of air and the cloud rises vertically. Natural dispersion of the cloud depends on atmospheric and wind conditions. Gas at concentrations within the upper and lower flammable limits can travel for long distances.

Natural gas is odorless. The sense of smell should not be relied upon to detect the presence of flammable gas. Fixed and portable combustible gas detection equipment is provided for this purpose.

In the presence of catalysts or sources of ignition, violent or explosive reactions can occur with mixtures of natural gas and oxidizing agents, such as chlorine, bromine pentaflouride, oxygen diflouride, and nitrogen trifluouride. Natural gas will burn spontaneously on mixing with chlorine dioxide. None of these catalysts will be used or stored at the Tacoma LNG facility.

Since Natural Gas Liquids (NGL's) can also be stored on the Tacoma site (NGL's are removed during the liquefaction process) the behavior of NGL's must also be examined. The exact composition of the NGL mixture on site is impossible to predict (since it varies with the composition of the pipeline gas). Like liquefied natural gas spills, NGL spills will eventually vaporize and disperse to the atmosphere. However, since most NGL constituents are heavier than air (propane, butane, pentane, hexane, etc.), it is predicted that most of any released NGL vapors will stay close to grade level and will spread out laterally during dispersion.

2.2 Vapor Hazards

Natural gas vapor is present within many of the components in the facility. The vapor may be present at any pressure from atmospheric to over 1000 psig (70 barg).

The major effort to prevent fire or minimize the scope of a vapor fire is to shut off the flow of combustible vapor. This may be accomplished either automatically or manually depending on the source of the vapor and the method of detection. Various sections of the facility can be remotely shut off independently or in conjunction with other sections to minimize the vapor flow.

3 LIQUEFIED NATURAL GAS SPILL SCENARIOS

The credible scenario for process leakage of liquefied natural gas to the environment, or a "Design Spill" as defined by PHMSA FAQ interpretation of NFPA 59A is the probable pipe and equipment failures for a time of 10 minutes or less based upon the spill detection and shutoff control of the facility and the PHMSA probability of failure table listed in the FAQ on facility siting.

There are four areas where liquefied natural gas leaks or spills are postulated to occur:

- Liquefied natural gas storage tank
- Over the top withdrawal line from in-tank pumps in the liquefied natural gas tank
- Liquefaction area and fill line to the LNG tank
- Truck station area
- Vaporizer area
- Marine Loading areas

Impoundment areas are provided for each of these locations. Impoundments will be sized to handle credible size spills, as described below and in NFPA 59A, that would occur in any of these areas. The design liquid spill in these areas will flow into a channel or curbed area that will direct the flow of liquid into an impoundment sump.

The facility will be designed to minimize the quantity of liquid that is spilled. The following features reduce the quantity of liquid in a spill and the hazard associated with the spill:

- Full containment storage tank with concrete outer tank secondary containment.
- In-tank pump usage and the elimination of storage tank nozzles below the liquid level of either the inner or outer tank.
- Liquefied natural gas storage tank outer concrete wall secondary containment is designed to contain 110% of the stored volume as required by 49CFR193.
- Curbed liquefied natural gas containment areas within all process areas which drain to impoundment sumps.
- Combustible gas detectors provided in all hazardous areas.
- Smoke detectors, UV detectors, high and low temperature detectors provided.
- Shutdown systems that allow the operator to shut down equipment for spill reduction.
- Plant siting in accordance with NFPA 59A and 49CFR193.

4 VAPOR CLOUD EXPLOSION (VCE)

A single design spill scenario of Mixed Refrigerant (MRL) release and ignition has been identified as a potential event. The MRL system is a closed loop refrigeration system and as such has limited volume. In the event of a VCE, local overpressure occurs, but no off-site events of significance occur as the off -site overpressure is small. For predicted overpressure levels see Section 9.0 of the Siting Report titled Vapor Cloud Explosion.

On-site, the LNG tank is protected from the VCE by its highly reinforced two foot thick concrete outer wall. Plant ESD valves will isolate the facility from the supply pipeline, and the LNG supply ESD valves on the tank top outlet will close due to their fail closed default position in the event of electrical or control systems failure. ESD valves are located at the metering area southeast of the process area and are well outside the 1.0 psi pressure boundary. Very little of the plant piping outside of the immediately effected area is elevated, thus has low probability of damage due to loss of support from the VCE. The underground firewater main feeding the Port is buried and maintained full of water and should not be affected by the VCE. While there may be local damage to firewater monitors and hydrants in the immediate vicinity of the VCE, there are sufficient redundant hydrant and hose supplies to maintain fire fighting capability. The diesel engine driven firewater pump and diesel supply tank (that will only be needed if the Hylebos dock is commissioned) are located far enough away from the VCE to be protected from the overpressure wave. Nothing at the TOTE dock is affected by VCE.

5 FIRE SCENARIOS WITH FIREFIGHTING EQUIPMENT

For a fire hazard to exist, fuel, oxygen, and an ignition source must be present. Eliminating any one of these three factors can control fire hazards. Correcting leaks, controlling venting and preventing spills of liquefied natural gas can reduce or eliminate the fuel. Purging vessels and piping with an inert gas prior to the introduction of liquefied natural gas or natural gas vapor will reduce the oxygen concentration to below the ignition range. Proper location and control of equipment and traffic can control ignition sources. It should be remembered that although methane or natural gas has a relatively high ignition temperature (above 1000ºF or 538°C), it requires very little energy to ignite a combustible natural gas mixture. For example, the sparks from static electrical charge on clothing, from a nail in a shoe, or from the switch in a non-hazardous service flashlight, are all potential ignition sources. All areas within the facility are properly classified according to API-500 and NFPA-70 (NEC) for hazardous area designations. See attached Hazardous Area Classification Dwgs. All electrical components and wiring will be properly designed and installed to suit the respective area classifications.

The potential source of fire in a liquefied natural gas facility is normally escaping gas or liquefied natural gas. This may be due to leaks, upset conditions resulting in pressure safety valve (PSV) discharge, spills or improper storage of flammable materials. Leaks and spills will predominately be in areas where equipment handling flammable material is located. The ignition source starting the fire could be static electricity, lightning, sparks, etc.

Areas in the plant where the potential for combustible liquid spills exists and the firefighting provisions made in each of those areas are outlined below.

5.1 Outer Concrete Tank Secondary Containment

The outer concrete tank is sized for 110% of the gross capacity of the liquefied natural gas inner tank container. This volume is used in determining thermal radiation flux limits for the facility. If the design tank fire should occur (which assumes complete loss of the roof) there is no firefighting technique (other than passive firefighting such as letting the fire burn out) that can be employed to put out the fire. Surfaces of remote equipment may be kept cool in the event of such a fire (if this can be done safely), but in most instances a fire of this magnitude will require complete evacuation of the facility.

5.2 Common Process Area Spill Containment Sump

There are multiple potential spills that will drain to this common process area sump. Since the downcomer LNG line from the LNG tank roof to the base of the tank (from the in-tank LNG pumps) is oversized to possibly use all three in-tank pumps simultaneously, the governing sizing basis for this sump is the 10 minute spill duration with all 3 in-tank pumps on simultaneously. Pump run-out is also considered in the sizing of the spill per the PHMSA FAQ. All other spills draining to this sump are smaller. The following areas also drain to this common sump.

5.2.1 Ex-tank LNG Pump and Vaporizer Area

There is a single ex-tank LNG pump and vaporizer used for vaporization of LNG back to the pipeline. An LNG spill potential exists in this area due to the presence of flanges, small bore connections and valve packings. Spill size is determined by the probability of spill from the PHMSA FAQ guidance document. Any spills in this area drain back to the common process area sump also used for the truck station and the facility side of the Blair loading dock line. The liquefied natural gas pump and vaporization impoundment sump is sized for a 10-minute "Design Spill" based on the in-tank pumps rated capacity. The volume of this design spill is used in determining vapor dispersion distances for the facility. Fire protection in this area is provided by:

- Local 20lb dry chemical fire extinguishers for small fire extinguishing.
- Wheeled 300lb dry chemical units with hose reel for larger fires.
- Fire water: Hydrant/monitors located in the area for fire control and heat protection.

5.2.2 Liquefaction Area

An LNG spill potential exists in this area due to the presence of flanges, small bore connections and valve packings. Spill size is determined by the probability of spill from the PHMSA FAQ guidance document. Spills from the mixed refrigerant condensing line and the LNG line from the liquefaction system to the tank are considered. The area is graded toward the collection trench to the common process area spill impoundment sump to assure that any spill will flow away from the equipment. Fire protection in this area is provided by:

- Local 20lb dry chemical fire extinguishers for small fire extinguishing.
- Skidded 1500lb dry chemical fire extinguisher unit with hose reel at the refrigeration area for fighting larger fires.
- Fire water: Hydrant/monitors located in the areas for fire control and heat protection.

5.2.3 Truck Station Area

An LNG spill potential exists in this area due to the presence of flanges, small bore connections and valve packings. Spill size is determined by the probability of spill from the PHMSA FAQ guidance document. Spills from the truck loading supply pipeline are considered. The area is graded toward the collection trench to the common process area spill impoundment sump to assure that any spill will flow away from the equipment. Fire protection in this area is provided by:

- Local 20lb dry chemical fire extinguishers for small fire extinguishing.
- Wheeled 300lb dry chemical units with hose reel.

- Skidded 1500lb dry chemical fire extinguisher unit with hose reel at the truck station for fighting larger fires.
- Fire water: Hydrant/monitors located in the areas for fire control and heat protection.

5.3 Spill Containment Sump for the Facility Side of the Blair Dock Line (to TOTE)

An LNG spill and fire potential exists at the facility due to the presence of flanges, small bore connections and valve packings at the launch vault for the underground pipeline to TOTE. Spill size is determined by the probability of spill from the PHMSA FAQ guidance document. The launch vault serves as a permanent spill collection sump. Any spill that happens over or in this sump will remain in the sump. The spill impoundment sump size is based on the dock loading rate (2640 gpm) plus pump runout. Fire protection in this area is provided by:

- Local 20lb dry chemical fire extinguishers for small fire extinguishing.
- Wheeled 300lb dry chemical units with hose reel.
- Fire water: Hydrant/monitors located in the areas for fire control and heat protection.

5.4 Spill Containment Sump for the dock side of the Blair Dock Line (to TOTE)

An LNG spill and fire potential exists at the Blair waterway loading dock due to the presence of flanges, small bore connections and valve packings. Spill size is determined by the probability of spill from the PHMSA FAQ guidance document. The loading platform, trestle, and pipeway are graded toward the collection trench to the local on-shore spill impoundment sump (also the receiving vault for the underground pipelines) to assure that any spill will flow away from the equipment and marine vessels. The spill impoundment sump size is based on the dock loading rate (2640 gpm) plus pump runout. Fire protection in this area is provided by:

- Local 20lb dry chemical fire extinguishers for small fire extinguishing.
- Wheeled 300lb dry chemical units with hose reel.
- Fire water: Hydrant/monitors located in the areas for fire control and heat protection.

5.5 Spill Containment Sump for the Hylebos Dock Line

An LNG spill and fire potential exists at the Hylebos loading dock due to the presence of flanges, small bore connections and valve packings. Spill size is determined by the probability of spill from the PHMSA FAQ guidance document. The loading platform, trestle, and pipeway are graded toward the collection trench to the local on-shore spill impoundment sump to assure that any spill will flow away from the equipment and marine vessels. The spill impoundment sump size is based on the dock loading rate (2640 gpm) plus pump runout. Fire protection in this area is provided by:

- Local 20lb dry chemical fire extinguishers for small fire extinguishing.
- Wheeled 300lb dry chemical units with hose reel.
- Fire water: Hydrant/monitors located in the areas for fire control and heat protection.

5.6 Standby Generator and Diesel Fuel Storage Area

Fire potential exists in this area due to the presence of flanges, small bore connections and valve packings. The diesel fuel storage area is curbed to contain a spill of an entire diesel fuel tank (plus any displacements such as piping equipment or additional tanks). Fire protection in this area is provided by:

- Local 20lb dry chemical fire extinguishers for small fire extinguishing.
- Fire water: Hydrant/monitors located in the area for fire control and heat protection.

5.7 Hot Oil Heating Medium Area

Fire potential exists in this area due to the presence of flanges, small bore connections and valve packings. The hot oil heating and storage area (used to supply regeneration heat to the Amine pretreatment system) is locally curbed to contain a spill of the entire hot oil inventory (plus any displacements such as piping equipment or additional tanks). The oil is not directed to any sump, but contained locally. Fire protection in this area is provided by:

- Local 20lb dry chemical fire extinguishers for small fire extinguishing.
- Wheeled 300lb dry chemical units with hose reel.
- Fire water: Hydrant/monitors located in the area for fire control and heat protection.

5.8 Amine Pretreatment System Area

Fire potential exists in this area due to the presence of flanges, small bore connections and valve packings. The chemical amine used for pretreatment of the incoming gas is not flammable, but spills are contained in this area for environment reasons. However, the hot oil used to supply regeneration heat to the Amine pretreatment system (which is piped to the pretreatment area) is flammable and is also contained in this area. The curbing and containment around the pretreatment system will hold the entire inventory of either Amine or hot oil (plus any displacements such as piping equipment or additional tanks). The Amine and oil are not directed to any sump, but contained locally. Fire protection in this area is provided by:

- Local 20lb dry chemical fire extinguishers for small fire extinguishing.
- Wheeled 300lb dry chemical units with hose reel.
- Fire water: Hydrant/monitors located in the area for fire control and heat protection.

5.9 Existing Modified Admin / Control Building

Fire fighting protection is provided in this building by:

- Local 20lb dry chemical fire extinguishers in all buildings for small fire extinguishing.
- Fire water: Hydrant hose lines for fire control / heat protection of equipment and structures.
- Sprinkler systems in office, storage, and meeting areas of the Admin Building

5.10 Compressor Building

Fire fighting protection is provided in this building by:

- Local 20lb dry chemical fire extinguishers in all buildings for small fire extinguishing.
- CO_2 fire extinguishers in for small hydrocarbon fire extinguishing.
- Fire water: Hydrant hose lines for fire control / heat protection of equipment and structures. Sprinkler systems in office, storage, and meeting areas of the Admin Building

5.11 Power Distribution Building

Fire fighting protection is provided in this building by:

- Local 20lb dry chemical fire extinguishers in all buildings for small fire extinguishing.

- CO_2 fire extinguishers for small fire extinguishing.
- Clean Agent fire suppression system for entire building

5.12 Plant Vehicles

All vehicles in a liquefied natural gas facility are required per NFPA 59A to have at least one hand held fire extinguisher (20lb capacity) on board.

6 HAZARD DETECTION DEVICES

A fire and hazard detection system is provided to monitor for the presence of flammable gases, fire, and liquefied natural gas spills in areas where a hazard to persons or equipment could exist. Audible and visible alarms warn of a detected hazard. The system is programmed to alarm an operator upon detection of a possible hazard. The operator has to analyze the potential hazard and determine if shutting down the equipment or activating the protection system is required. Most shutdowns from fire or hazard detection will be manual shutdowns that plant personnel must activate. However, shutdowns of combustion equipment (for instance the Water Ethylene Glycol Vaporizer, the Regen Heater, and the Amine Reboiler Heater) will be automatic in the event of combustible gas detection in the air intakes.

Protection systems are provided for fire exposure, cryogenic spill, gas detection, flame detection, smoke detection, high and low temperature detection as well as manual alarms. The protection systems consist of fire hydrants and monitors, sprinkler and fixed water spray systems, dry chemical extinguishers, and passive thermal and cryogenic spill protection.

6.1 Combustible Gas Detectors

Fixed combustible gas detecting sensors are located at various locations within the facility where the possibility of a gas leak is most likely to occur. These areas include the metering area, pretreatment area, liquefaction area, compressor area, tank top platform, natural gas vaporizer area, truck loading station, and marine loading areas. They will also be placed at air intake areas for all fired equipment. These detectors are programmed to alarm at 20% (high) and 40% (high-high) of the lower flammability limit (LFL). The location of gas detectors throughout the facility and at the Blair waterway (TOTE) dock is shown on drawings 186512-000-IC-05-00001 and 00002.

In addition, gas detectors will be provided on the air intake of the Power distribution and Control/Admin buildings. Audible and visible alarms will be located on the exterior of these buildings to indicate high combustible gas concentrations within.

In the event of gas detection, alarms appear on the operator terminals. Audible alarms (hazard horns) and beacons are also activated by a high or high-high alarm. If a high alarm is acknowledged on any one of the operator terminals, the horns will be turned off, but the beacons will stay on until the alarm condition clears. If the high-high alarm is initiated before the alarm condition clears, the horns will turn on again.

Operational procedures and posted signs/barriers will delineate areas, which have restricted access due to the potential for combustible gas to be present. These areas are manually checked with portable gas detectors before any activity is allowed. This system of entry/hot work permits adds an additional level of safety.

6.2 Ultraviolet/Infrared Flame Detectors

Ultraviolet/Infrared (UV/IR) flame detectors are located at various locations within the facility where the possibility of a fire is most likely to occur. They are located at the amine pretreatment area, liquefactions area, compressor area, truck loading area, pigging area, transformers area, and vaporizer area. The detectors are always mounted on elevated poles, equipment structures, or building roofs. These detectors work on line of site detection. An attempt is made to position and angle the detectors for the maximum effectiveness in detecting a flame. The location of flame detectors throughout the facility is shown on drawings 186512-000-IC-05-00001 and 00002. These detectors are programmed to alarm on all the operator terminals. The detectors will also activate audible alarms (hazard horns) and beacons.

6.3 Smoke Detectors

Smoke detectors are located at various indoor areas (building interiors) within the facility. Smoke detection will be accomplished using ionization-type detectors. They will be provided in the Power Distribution and Control/Admin buildings. The location of smoke detectors throughout the facility is shown on drawings 186512-000-IC-05-00001 and 00002. These detectors are programmed to alarm on all the operator terminals. These detectors will also activate audible alarms (hazard horns) and beacons.

6.4 High Temperature Detectors

High temperature detectors are located on each of the liquefied natural gas tank relief valve discharge stacks in order to detect a fire at a stack nozzle. The location of the high temperature detectors throughout the facility is shown on drawings 186512-000-IC-05-00001. These detectors are programmed to alarm on all the operator terminals. The detectors will also activate audible alarms (hazard horns) and beacons.

6.5 Low Temperature Detectors

Low temperature detectors utilizing platinum Resistance Temperature Detectors (RTD's) are located in the liquefied natural gas spill impoundment sumps and the process spill transmission troughs in order to detect a spill of a cryogenic or low temperature liquid. The one detector in the troughs is at the process area. The detectors in the sumps are interlocked with the sump pumps to prevent the pumps from operating in the event of an LNG accumulation. The location of the low temperature detectors is shown on drawings 186512-000-IC-05-00001 and 00002. These detectors are programmed to alarm on all the operator terminals. An audible alarm will sound in the area where the spill is detected.

7 FIRE PROTECTION SYSTEMS

The means of extinguishing gas fires is through the use of dry chemical and CO2 extinguishers. The large dry chemical extinguisher equipment layout is shown on drawing 186512-000-PI-01-002032. Hand held extinguishers will also be distributed throughout the facility, but are not shown on this drawing.

The main purpose of the firewater system is to provide exposure protection and cooling for adjacent equipment, structures, and buildings during a fire condition. The firewater system can also be used to put out non-hydrocarbon and non-chemical based fires. The on-site firewater system at the main facility is an underground pipe loop so as to allow flow from more than one direction to most hydrants and monitors. The TOTE dock firewater system consists of a couple of monitors fed from a tie-in to the existing firewater system at the TOTE property. The new monitors are located at the entrance to the jetty and at the platform. All hydrant and monitor connections will be compatible with local municipal fire department equipment. The underground firewater piping will be HDPE. The aboveground firewater piping out to either marine jetty will be carbon steel and is heat traced and insulated.

Firewater hydrants and monitors are strategically placed around the facility to permit firefighting and adjacent equipment/structure cooling. Elevated monitors on the jetty can deliver firewater to the marine vessels manifold connections and a ship to shore firewater connection is provided for vessel connection.

The firewater system layout showing the location of the underground piping loop, underground isolation valves, monitors, and hydrants is shown on drawings 186512-000-PI-01-02030 and 02031.

7.1 Fire Water System Sizing

NFPA 59A requires the firewater system capacity be sized for the largest single anticipated incident plus 1000 gpm for hand lines. The fire water system capacity at the main Tacoma LNG facility is adequate to cover the largest single controllable fire from the fire scenarios listed in section 5 above. The single biggest fire scenario at the main facility is anticipated to require two 500 gpm monitors cooling adjacent equipment during a process area or sump fire. Adding 1000gpm for hand lines gives a total required firewater system capacity of 2000gpm. This is a typical capacity for an LNG facility of this type and size. The most recent LNG peakshaving facilities in North America are all sized similarly based on the same NFPA59A mandated basis. A summary of several of these facilities firewater system sizing basis is listed in Table 7.1 below.

The single biggest fire scenario at the TOTE dock is anticipated to require a single 500 gpm monitor cooling adjacent equipment during a dock area or sump fire. Adding 1000gpm for hand lines gives a total required firewater system capacity of 1500gpm.

TABLE 7.1

FACILITY	COMMISSION DATE	DESCRIPTION	FIREWATER SYSTEM CAPACITY
South Carolina Natural Gas - Salley, SC	1994	LNG SATELLITE - 10.7 MMGal SC Storage Tank, 90MMSCFD Vaporization, and Truck Loading/Unloading	2000 gpm
Memphis Power and Light - Capleville, TN	1997	LNG PEAKSHAVER - 11.8 MMGal SC Storage Tank, 60.5Mgal/day Liquefaction, 150MMSCFD Vaporization, and Truck Loading	2500 gpm
Pine Needle - Guilford County, NC	1999	LNG PEAKSHAVER - 47.6 MMGal SC Storage Tank, 242Mgal/day Liquefaction, 400MMSCFD Vaporization, and Truck Loading	2000 gpm
Yankee Gas - Waterbury, CT	2007	LNG PEAKSHAVER - 14.8 MMGal FC Storage Tank, 72.6Mgal/day Liquefaction, 150MMSCFD Vaporization, and Truck Loading/Unloading	1800 gpm
Mt Hayes - Vancouver Island, BC	2011	LNG PEAKSHAVER - 18.6 MMGal SC Storage Tank, 90.7Mgal/day Liquefaction, and 150MMSCFD Vaporization	2500 gpm
PROPOSED TACOMA LNG FACILITY		**LNG FUELING AND PEAKSHAVER - 8 MMGal FC Storage, 250Mgal/day Liquefaction, 60 MMSCFD Vaporization, and Truck/Marine Vessel Loading**	**2000 gpm**

SC – Single Containment
FC – Full Containment

Note: The most recently commissioned North American LNG peakshaving facility with similar capacity and functionality to the proposed Tacoma facility, the Mt Hayes LNG facility on Vancouver Island, had its firewater system sized slightly larger (2500gpm) because it had a single containment tank with steel outer wall and a deluge system on the MRL constituent storage vessels. As such, the Mt Hayes facility base firefighting scenario required an additional 3rd 500 gpm monitor for tank cooling.

7.2 Fire Water Supply

Firewater for the Tacoma LNG facility will be supplied from the underground municipal firewater main for the entire Port of Tacoma. The existing main system is large enough to supply the 2000gpm flow at adequate pressures. For increased reliability, the facility will draw from the Port of Tacoma firewater main system at two points: One inner connection on the West of the facility along Alexander Ave and one connection on the South side of the facility along 11th St. The facility underground firewater piping loop will be new construction (the existing system will be abandoned). Since the Port of Tacoma firewater system has more than enough reserve to supply the Tacoma LNG firewater ring at 2000 gpm for a minimum of two hours (NFPA-59A requirement), no firewater tank or reservoir is required on-site. Inadequate pressure measurement within the on-site underground firewater loop will alarm on the facility control system.

Firewater for the Blair loading dock (at TOTE's facility) will be supplied by the existing underground firewater system at TOTE's facility. This system is also fed from the existing underground municipal firewater main system supplying the Port of Tacoma.

7.3 Fire Water Pump

If the on-site Hylebos loading dock is constructed, a firewater boost pump is required on-site to maintain the code mandated (33CFR127 - Waterfront Facilities Handling LNG, section 127.607) minimum pressure of 75 psig at the dock with two firewater outlets open. The firewater boost pump will be an electric motor driven pump that will only turn on in the event the pressure at the dock drops below the code mandated pressure. Malfunction of the firewater boost pump will alarm on the facility control monitors. If the Hylebos dock is not commissioned for LNG loading, the firewater boost pump is not required.

7.4 Fire Water Piping

7.4.1 Underground Piping

The main fire water underground supply line is 10 inch diameter to the process area ring. Underground firewater piping is HDPE. The piping will be installed per NFPA 24 using thrust blocks and/or joint locking devices such as Megalugs.

7.4.2 Aboveground Piping

The aboveground piping is painted Class 150 carbon steel piping. Outside shall be painted red.

7.5 Firewater Loop Isolation Valves

Post indicating gate valves are located at various locations in the loop to provide isolation capabilities for system maintenance. Valve locations are such that isolation can be made for sections of the loop without decommissioning the entire system. Location of the post indicating valves is shown on the firewater layout drawings 186512-000-PI-01-02030 and 02031.

7.6 Hydrants and Monitors

There are multiple fire hydrants and hydrant/monitors located in the facility. All plant buildings and shelters will have at least one fire hydrant within 100 feet.

Monitors are rated at 500 gpm at 100 psig and fitted with an adjustable fog/straight stream nozzle. Each single monitor has a full 360° rotation and adjustable elevation features. Monitors have a coverage area circle with a 120ft radius. The manual shut-off valve for a monitor is a 4" wafer butterfly valve.

Coverage from the firewater monitors is shown on drawing 186512-000-PI-01-002033. Additional coverage from hydrants using hoses is also available beyond that shown on the monitor coverage drawing. An attempt has been made to provide adequate firewater firefighting capability in areas deemed to have a risk of fires (as outlined in section 5).

7.7 Hose Houses

Hose houses are provided for each hydrant. In some cases they may be common to certain clusters of hydrants in an area. The fire hoses conform to NFPA 1961. Hose houses contain the following equipment**:**

- Two 50 foot lengths of 1 ½" female-ended, canvas hose with both lengths coupled together. One end will be attached to the hydrant and the other end coupled to a fog/straight stream nozzle.
- Two 50 foot lengths of 2 ½" canvas hose with both lengths coupled together.
- Two combination play pipes with 2 ½" inlet and outlet connections complete with constant volume fog/straight stream/shutoff nozzles.
- Two 2 ½" male to male adapters and two 2 ½" by 1 ½" male to male adapters.
- One hydrant wrench.
- Two coupling spanners for 2 ½" hose and two coupling spanners for 1 ½" hose.
- Two sets of hose coupling gaskets.

7.8 Dry Chemical Extinguishing Systems

Dry chemical extinguishing units (of varying sizes and types) are located throughout the facility. The large dry chemical equipment layout and coverage (fixed, skidded, or wheeled, but not hand held) is shown on drawing 186512-000-PI-01-002032. An attempt has been made to provide adequate dry chemical firefighting capability in areas deemed to have a risk of controllable fires (as outlined in section 5). Uncontrollable fires have been accounted for through the use of passive firefighting (for instance a tank impoundment fire is expected to just burn out over time with no failure of the concrete secondary containment wall).

The following areas in the facility will be provided with large skidded (1500#) dry chemical extinguishing units mounted on concrete slabs:

- Refrigeration Area
- Truck Loading Area

The skids will be equipped with two 150 ft long hoses and long range nozzles extending their reach to 190 ft. This reach allows the two skids to cover the entire process area. Coverage is shown on dwg 186512-000-PI-01-002032.

300lb wheeled dry chemical units are provided at the following locations:

- Marine loading areas
- Truck loading area
- LNG ex-tank pump and vaporizer area
- Process area sump / Flare Area
- Sumps at both ends of the underground Line to TOTE
- Hot oil heater and storage area

These units are intended for movement to fight fires in the areas where needed. These units have a 100 foot hose and will be provided with potassium bicarbonate (Purple-K).

7.9 Handheld Fire Extinguishers

Handheld dry chemical fire extinguishers are located per NFPA 10. All hand held extinguishers will have a 20lb capacity. All buildings will be equipped with at least one (and in most cases multiple) hand held extinguishers. The control room, power distribution building, and compressor building will also be equipped with CO2 extinguishers located on the walls throughout the interior of the buildings (one roughly every 40 feet of wall lineage).

7.10 Nitrogen Snuffers

Nitrogen snuffing is provided for each of the pressure relief valve vent stacks located on top of the liquefied natural gas storage tank(s). These nitrogen snuffers are provided as a means to extinguish fires that may occur if a tank relief valve is venting.

7.11 Sprinkler Systems in Offices

Sprinklers will be installed in the office and meeting areas in the Administration building. Sprinkler heads will use heat fusible links for activation.

7.12 Fireproofing of Structural Steel

Fireproofing of structural steel is included where required by code. This is initially anticipated to be steel that supports LNG containing pipes or equipment. Since ConXTech steel will be used for the main piperacks (which have columns full of concrete) and since the main racks are fairly close to grade, the main racks (N-S, E-W) will not be fireproofed. Fireproofing of structural steel will be included as follows:

- Pipe rack to and above truck loading area
- Supports for Ex-tank LNG Pump
- Supports in and above both UG pipeline vaults
- Lower 30% of support structure for LNG liquefaction heat exchangers (aka: Liquefaction tower).

Fireproofing of structural steel consists of sprayed on insulating material that helps protect the steel in the event of hot and/or cryogenic temperature exposure.

8 FIRE OR SPILL EMERGENCY PROCEDURES

8.1 General Response to Fires

This section gives guidelines to follow for predictable controllable fires. The more common predictable fires are discussed. Other unforeseen fires are possible. Facility personnel shall always be alert for possible fires, both predictable and unpredictable.

Personnel at, or arriving at the scene of a fire, should work together to control the situation. The appropriate steps to be taken will depend on the actual conditions. These steps may include one or more of the following:

- Warn other personnel in the immediate vicinity.
- Notify personnel in the control room. At least one person should maintain communications contact with the control room.
- Activate the appropriate ESD, if conditions warrant.
- Remove any injured personnel and administer first aid.
- Necessary equipment and apparatus should be brought to the scene of the fire.

8.2 Control Room Personnel Response

Upon notification of an emergency, personnel in the control room should assist to control and end the emergency. The appropriate steps to be taken by control room personnel may include one or more of the following:

- If a detector in the plant alarms, send personnel along with any required equipment to the scene. All personnel should exercise caution.
- Activate the appropriate ESD if conditions warrant.
- Notify supervisory personnel. Names and telephone numbers of people to contact in an emergency should be clearly posted. In addition to plant personnel, this should include the police, paramedics, ambulance, emergency squad, etc.
- Establish whether the emergency is controllable or uncontrollable. If uncontrollable, the appropriate emergency personnel should be contacted.

8.3 Responding to a Minor Spill or Leak

The following guidelines should be followed when responding to a spill or leak of a fluid at cryogenic or low temperature. Cryogenic and low temperature fluid spills and leaks must be stopped immediately to minimize the hazards. Closing a shutoff valve in the line supplying the fluid can usually do this. The extent of the flammable air-gas mixture around the spill or leak should be determined with a portable gas detector. Shut down all equipment in the area and eliminate possible ignition sources. Be alert for the flammable zone shifting into other areas due to a wind shift. After the leak or spill has been stopped, allow the air-gas mixture to naturally disperse before repairing leak or restarting equipment.

Small cryogenic leaks can be temporarily "plugged" or stopped by wrapping the leaking joint area with several wraps of a towel wetted with water or similar cloth material. This method controls small medium to low pressure leaks while the system is being shutdown to make the repair.

Carbon steel, concrete, and other warm service materials that are not protected, must be segregated from the spill or leak. Wood, cardboard, sheet metal or other suitable material can be used as a barrier between warm service materials and the leak. Note that if liquefied natural gas spills onto warm service material, the material may become brittle and fracture. An example would be a valve packing or flange leak hitting on warm service piping or an unprotected support.

8.4 Responding to an Uncontrollable Liquefied Natural Gas Spill

In the unlikely event of a major liquefied natural gas spill from the liquefied natural gas tank the facility shall be evacuated. The wind speed and the spill volume will affect the distance that the vapor cloud will travel. With a higher wind speed the vapor will be dispersed in a shorter distance than with a low wind speed. However, if the wind speed is low, the lower explosive limit may be attained and if an ignition source exists, the vapor will ignite.

In the event of an uncontrollable liquefied natural gas spill, the following actions shall be taken:

- Activate Plant ESD button.
- Evacuate all personnel at the storage facility and take head count.
- Coordinate with the local fire department to evacuate all members of the public near the facility. Account for all personnel and establish a re-assemble site or area for plant personnel. The re-assemble site should be well upwind of a potential vapor cloud.

8.5 Relief Valves

Relief valves should not operate during normal facility operations. If a relief valve does relieve, it is an indication of possible facility malfunction. The cause of the relieving should be found and corrected immediately. In no case should the relief valve be worked on while the affected part of the facility is in operation.

A relieving relief valve can vent large quantities of flammable gases. The section of piping, vessel or equipment that the relief valve protects should be isolated by shutting down the mechanical equipment in the area and manually closing appropriate block valves.

8.6 Leaking Relief Valves

Dirt or other debris can scratch the seat of a relief valve causing it to leak or not reset tightly. The relief valve can then leak a cryogenic or low temperature liquid, or a flammable gas. Leaking relief valves should be considered dangerous and should be repaired immediately. The relief valve should be isolated and affected equipment shut down while the relief valve is being repaired. The affected equipment should never be operated while a relief valve has been removed for repair unless there is provision specifically made for this ability, such as for the storage tank.

Relief valves must not be hit with any implement in an attempt to reset the valve. This can cause additional relieving of the valve or a spark that may ignite any flammable gases.

8.7 Leaks in Flange Gaskets

Any time gas is admitted to a line for the first time or after a repair, there is possibility for a leak in the flange gaskets within the line. Leaks may be detected by listening, or with a portable gas detector. If a leak is heard or suspected, do not feel for the leak with the hand. A small leak of high-pressure gas (over 10 barg) can amputate a finger or a hand as it is run around the flange in an effort to feel a leak. Use a cloth, stick or other suitable means to detect a leak if a gas detector is not available. Care should be taken not to cause any sparks that may ignite the flammable gases near the leak.

8.8 Valve Packing Leaks

Valves in cryogenic or low temperature service should be checked during cool down and frequently after start-up for packing leaks. If a cryogenic or low temperature leak occurs, it must be prevented from hitting warm material surfaces. Wood or cardboard can be used to divert the leak. Care should be taken not to cause any sparks that may ignite the flammable gases near the leak. The leaking packing must be repaired immediately if a flammable fluid is involved.

8.9 Leaks Causing Pool(s) of Hydrocarbons

When a leak is sufficiently large to cause a pool of hydrocarbon liquid, the facility should be shut down and fire prevention precautions taken. The facility should not be restarted until the pool is completely vaporized and a combustible mixture no longer exists in the area.

9 GENERAL FIRE FIGHTING TECHNIQUE

In general, fire fighting in a liquefied natural gas plant will involve fires from natural gas leakage or liquefied natural gas spills. The response should be to isolate the fire from the source of fuel (this is usually accomplished by shutting off valves or emergency shutoff devices located in the piping) and protect adjacent equipment and property (such as cooling their surfaces with water).

For a liquefied natural gas spill that has caught fire, special fire fighting procedures are required. A liquefied natural gas fire can be extinguished by smothering it or removing the oxygen from the burning mixture. The best material to use on a liquefied natural gas pool fire is a dry chemical extinguisher. The dry chemical agent should be directed into the fire above the boiling surface until the fire is out.

Water should not be put directly on liquefied natural gas fires. Spraying water onto a liquefied natural gas pool will disrupt the surface and add additional heat to the liquefied natural gas pool, thereby increasing vapor generation and the fire intensity. Water should be used to cool adjacent equipment or structures to prevent spread of the fire or heat damage to the equipment.

It is important that adequate equipment and manpower be available before an attempt is made to control or extinguish the fire. Early in the fire fighting operation, a decision should be made whether to try to contain the fire and let it burn out or whether to attempt to extinguish it. If the fire is extinguished, care must be exercised to prevent hot surfaces or other ignition sources from re-igniting the gases.

Fire from natural gas under pressure can be extinguished by eliminated or shutting off the fuel source. Sometimes this may require allowing the source to burn out or to de-pressurize before the fire can be extinguished or brought under control.

10 GENERAL SAFETY RULES

The following safety rules will be put into effect while natural gas, flammable refrigerants or other flammable fluids are within the facility:

- "No Smoking" signs posted in appropriate areas.
- "Hot Work" permits shall be required in all process areas prior to performing any burning, cutting, welding or other "hot work".
- Cleaning solvents, paints, combustible liquids, solids should not be stored in the process area.
- All motorized vehicles should travel only on designated roads.

11 DRAWING AND REPORT ATTACHMENTS

DRAWINGS	DESCRIPTION
186512-000-SE-01-000011, Rev C	Thermal Radiation Zones (showing Hylebos Dock)
186512-000-PI-01-002030, Rev B	Firewater System Layout Dwg – Main Facility
186512-000-PI-01-002031, Rev C	Firewater System Layout Dwg – TOTE Dock
186512-000-PI-01-002033, Rev C	Firewater System Monitor Coverage Drawing
186512-000-PI-01-002032, Rev B	Dry Chemical Equipment Location and Coverage Dwg
186512-000-IC-05-00001, Rev C	Fire and Gas Detector Layout – Main Facility
186512-000-IC-05-00002, Rev B	Fire and Gas Detector Layout – TOTE Dock
186512-000-CV-08-00101 to 103, Rev B	LNG Spill Containment Plans
186512-000-EL-10-000001, Rev C	Hazardous Area Classification Drawing – Main Facility
186512-000-EL-10-000002, Rev B	Hazardous Area Classification Details
186512-000-EL-10-000003, Rev A	Hazardous Area Classification Details
186512-000-EL-10-000004, Rev B	Hazardous Area Classification Drawing – TOTE Dock

REPORTS	DESCRIPTION
186512-000-SE-RP-000001, Rev B	Siting Report

12 SAFETY REFERENCE MANUALS

The following organizations have published information concerning the safety practices involved in storage and handling of hydrocarbons.

American Petroleum Institute (API)

1271 Avenue of the Americans

New York, New York 10020

Compressed Gas Association, Inc. (CGA)

500 5th Avenue

New York, New York 10036

Manufacturing Chemists Association (MCA)

Universal Building 1825

Connecticut Avenue Northwest

Washington, D.C. 20009

National Fire Protection Association (NFPA)

60 Batterymarch Street

Boston, Massachusetts 02100

U.S. Coastguard

Washington, DC

American Gas Association (AGA)

1515 Wilson Blvd.

Arlington, Virginia 22209

British Cryogenics Council, Safety Panel,

Cryogenics Safety Manual.

American Gas Association, LNG for Personnel Safety

Arlington, VA 1973

Matheson Gas Products, Matheson Gas Data Book, Fifth Edition,

East Rutherford, NJ 1971.

General Electric, Material Safety Data Sheets

Schenectady, NY, 1980

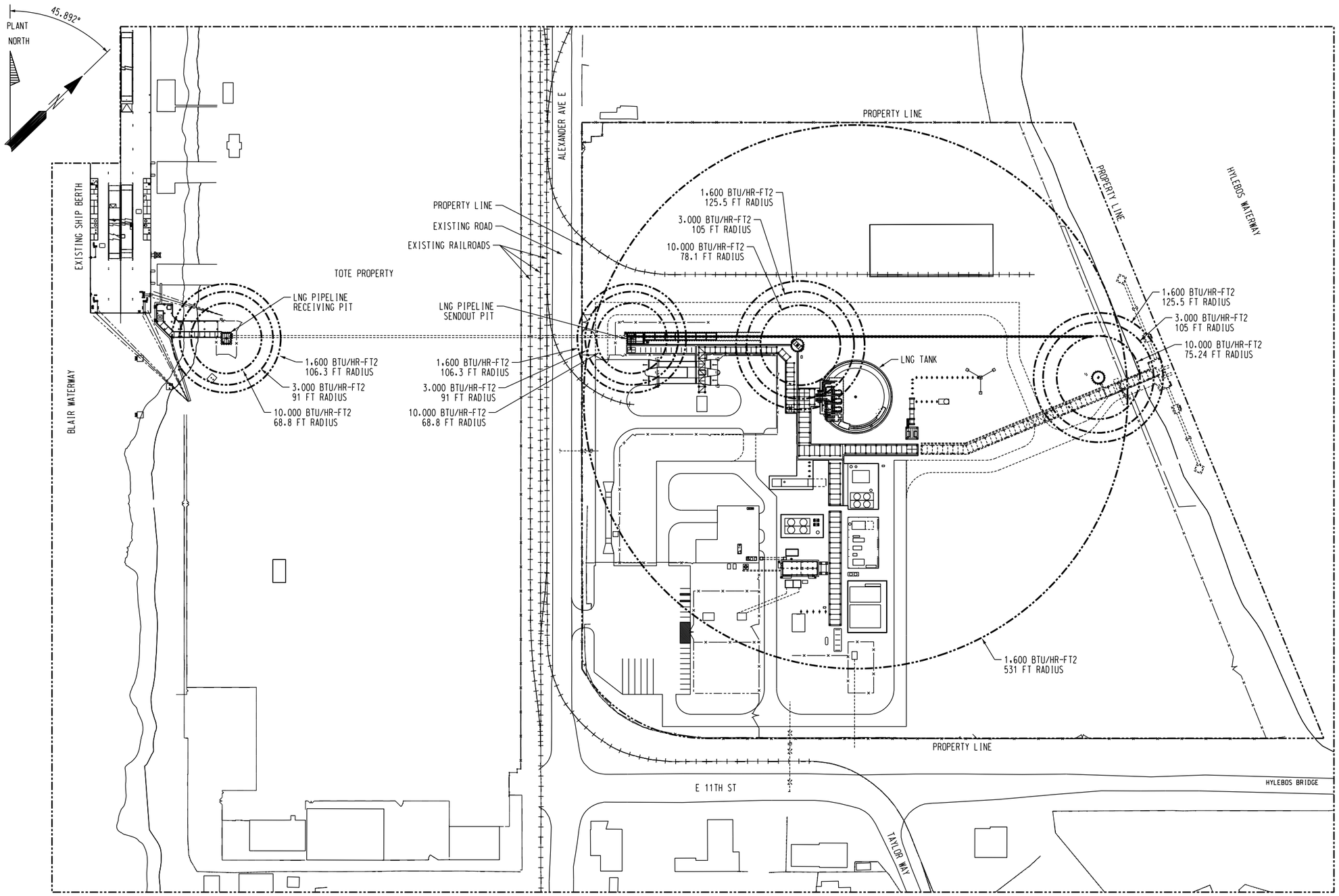

0 100 200 300 400 500
SCALE: FEET

CLIENT DWG NO: —

NOTES

CONTAINS CRITICAL ENERGY INFRASTRUCTURE INFORMATION
DO NOT RELEASE

REFERENCE DRAWINGS	NO.	REVISION	DRAWN	CK'D	APPD	DATE
	-	-	-	-	-	-
	-	-	-	-	-	-
	-	-	-	-	-	-
	C	ISSUED PRELIMINARY	DAS	GCB	MES	16JUN15
	B	ISSUED PRELIMINARY	DAS	GCB	MES	22APR15
	A	ISSUED PRELIMINARY	DAS	GCB	MES	13APR15

DRAWN: DAS | CK'D: GCB | APPD: MES | DATE: 13APR15 | SCALE: AS SHOWN

THERMAL EXCLUSION ZONE PLAN - MAIN LNG PLANT WITH BLAIR DOCK AND HYLEBOS DOCK

TACOMA LNG
TACOMA, WA

FOR: PUGET SOUND ENERGY

PROJECT NO: 186512 | DWG NO: 000-SE-01-000011 | REV: C

Form: CM5-830-00-FM-02104 CBI ANSI D.dwg

IDOCS FOLDER 14.9

H:/Project/186512 - Tacoma/2015 Onward/05 Engineering/5.13 Drawings/5.13.02 Sitework/186512-000-SE-01-000011.DGN

LEGEND:

- POST INDICATING FIREWATER VALVE
- FIREWATER MONITOR (120 FT REACH)
- FIREWATER HYDRANT
- FIREWATER NEW PIPE
- FIREWATER EXISTING PIPE
- FIREWATER OPTIONAL PIPE

0 100 200 300 400 500
SCALE: FEET

CLIENT DWG NO: —

NOTES

CONTAINS CRITICAL ENERGY INFRASTRUCTURE INFORMATION
DO NOT RELEASE

REFERENCE DRAWINGS	NO.	REVISION	DRAWN	CK'D	APPD	DATE
	-	-	-	-	-	-
	-	-	-	-	-	-
	-	-	-	-	-	-
	C	ISSUED PRELIMINARY	DAS	MES	MES	29JUN15
	B	ISSUED PRELIMINARY	DAS	GCB	MES	18JUN15
	A	ISSUED PRELIMINARY	DAS	GCB	MES	21MAY15

DRAWN: DAS | CK'D: GCB | APPD: MES | DATE: 21MAY15 | SCALE: AS SHOWN

FIREWATER COVERAGE DRAWING (WITH HYLEBOS OPTION)

TACOMA LNG
TACOMA, WA

FOR: PUGET SOUND ENERGY

PROJECT NO: 186512 | DWG NO: 000-PI-01-002033 | REV: C

Form: CMS-830-00-FM-02104 CB1 ANSI D.dwg

H:/PROJECT/186512-TACOMA/2015 ONWARD/05 ENGINEERING/5.13 DRAWINGS/5.13.07 PIPING/186512-000-PI-01-002033.DGN
IDOCS FOLDER 14.3.2

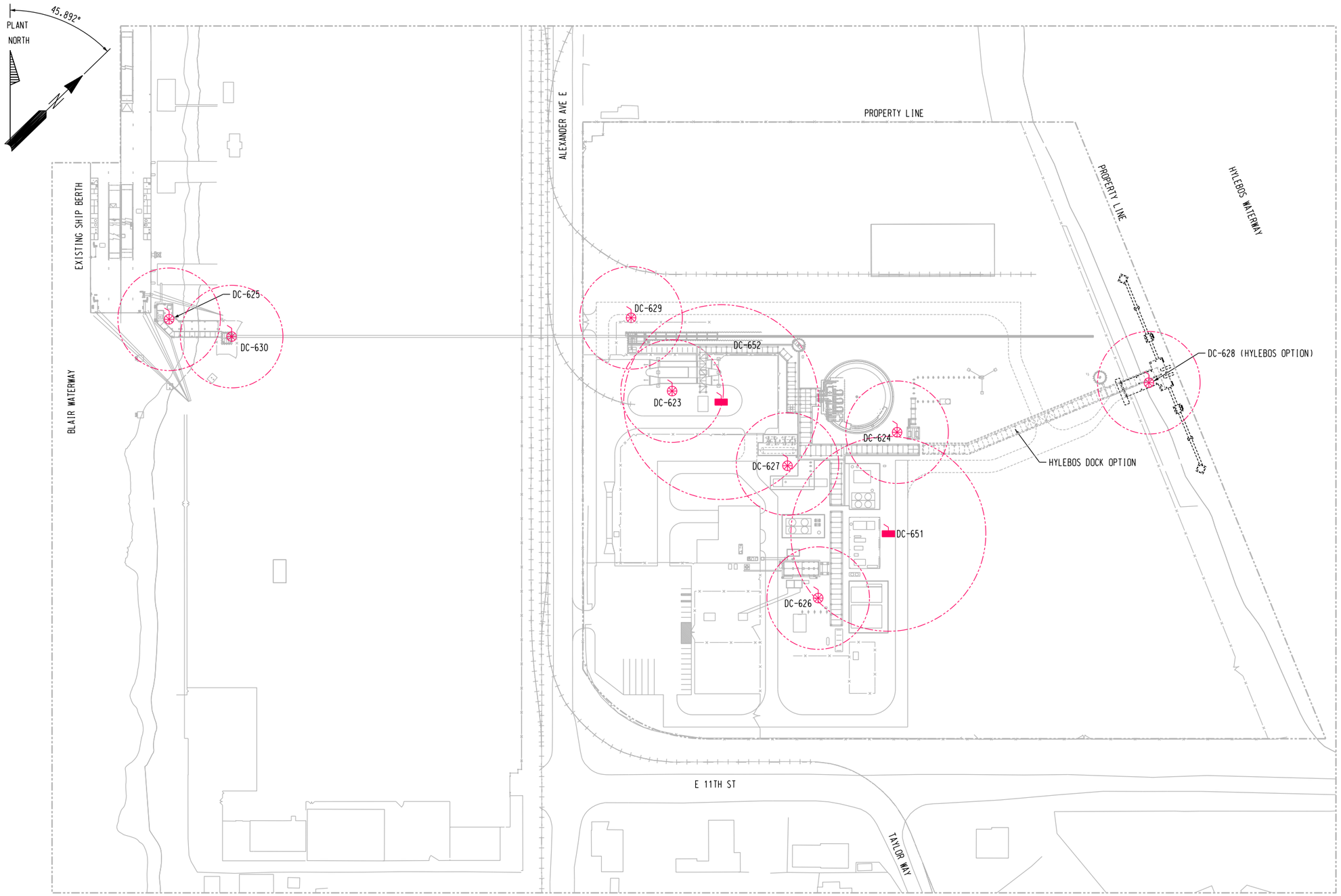

LEGEND:

TYPE: WHEELED
SIZE: 300 LBS
HOSE: 100 FT
REACH: 100 FT
NOZZLE: NORMAL

TYPE: SKID
SIZE: 1500 LBS
HOSE: 150 FT
REACH: 190 FT
NOZZLE: LONG REACH

0 100 200 300 400 500
SCALE: FEET

CLIENT DWG NO: –

NOTES

CONTAINS CRITICAL ENERGY INFRASTRUCTURE INFORMATION
DO NOT RELEASE

REFERENCE DRAWINGS	NO.	REVISION	DRAWN	CK'D	APPD	DATE
	–	–	–	–	–	–
	–	–	–	–	–	–
	–	–	–	–	–	–
	–	–	–	–	–	–
	B	ISSUED PRELIMINARY	DAS	GCB	MES	18JUN15
	A	ISSUED PRELIMINARY	DAS	GCB	MES	21MAY15

DRAWN: DAS | CK'D: GCB | APPD: MES | DATE: 21MAY15 | SCALE: AS SHOWN

DRY CHEMICAL EQUIPMENT LAYOUT AND COVERAGE (WITH HYLEBOS OPTION)

TACOMA LNG
TACOMA, WA

FOR: PUGET SOUND ENERGY

PROJECT NO: 186512 | DWG NO: 000-PI-01-002032 | REV: B

Form: CMS-830-00-FM-02104 CB1 ANSI D.dwg

H:/PROJECT/186512-TACOMA/2015 ONWARD/05 ENGINEERING/5.13 DRAWINGS/5.13.07 PIPING/186512-000-PI-01-002032.DGN

IDOCS FOLDER 14.3.2

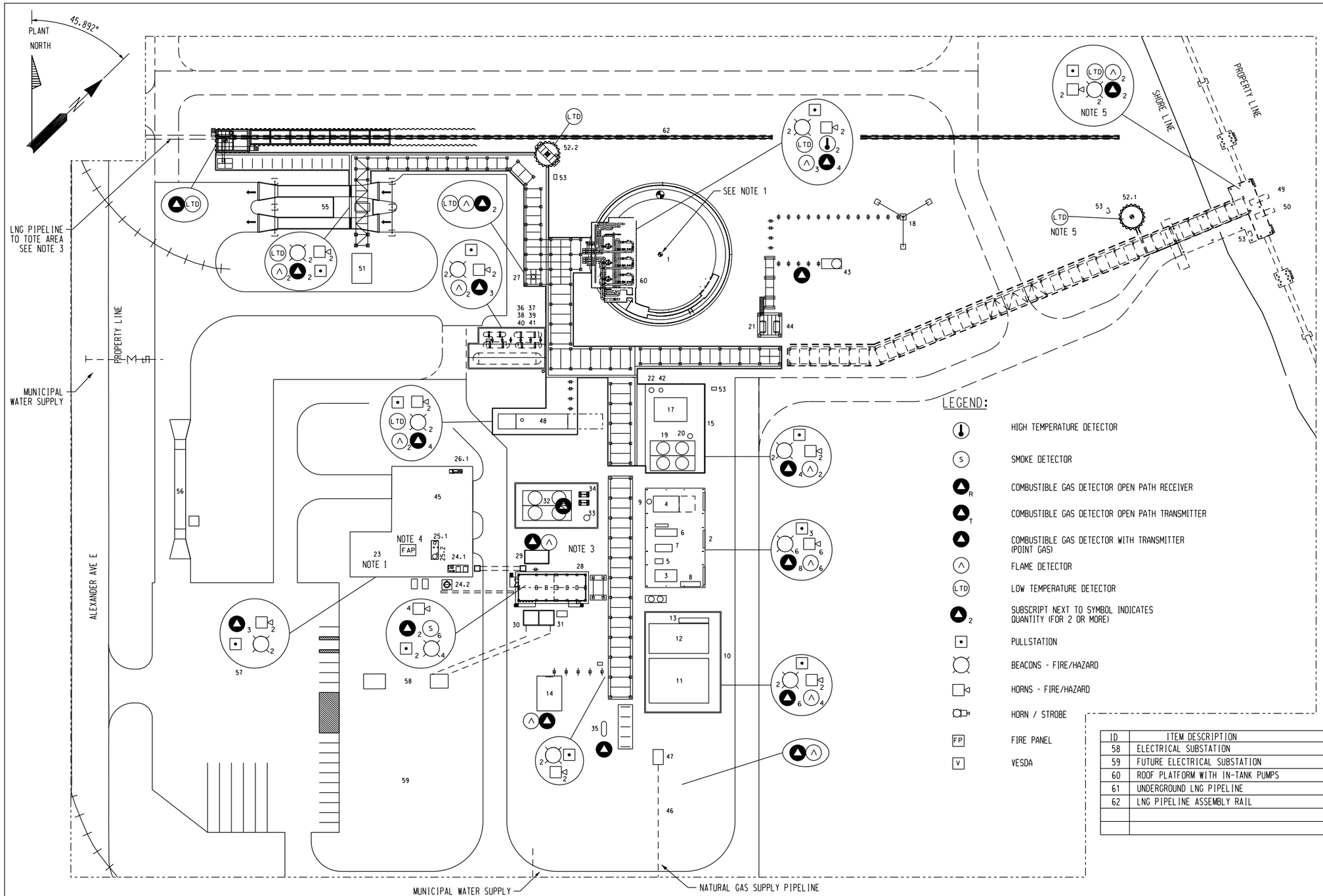

ID	ITEM DESCRIPTION
1	LNG STORAGE TANK
2	COMPRESSOR BUILDING
3	FEED GAS COMPRESSOR
4	MRL COMPRESSOR
5	MRL STORAGE COMPRESSOR
6	BOG COMPRESSOR
7	BOG HEAT EXCHANGER SKID
8	GAS CHROMATOGRAPH
9	MRL COMPRESSOR SUCTION SEPARATOR
10	PRETREATMENT AREA
11	AMINE PRETREATMENT SYSTEM
12	MOLE SIEVE PACKAGE
13	PRETREATMENT AFTERCOOLER
14	REGENERATION HEATER SKID
15	LIQUEFACTION AREA
16	FEED GAS COMPRESSOR AFTERCOOLER
17	LIQUEFACTION HEAT EXCHANGER
18	EMERGENCY FLARE
19	MRL CONDENSER
20	MRL RECEIVER
21	EMERGENCY FLARE KNOCK OUT DRUM
22	FUEL GAS SEPARATOR VESSEL
23	CONTROL, MAINTENANCE, ADMINISTRATION BUILDING
24.1	INSTRUMENT AIR SYSTEM
24.2	INSTRUMENT AIR RECEIVER
25.1	WATER TREATMENT UNIT
25.2	RO WATER STORAGE TANK
26.1	FIREWATER BOOST PUMP (HYLEBOS OPTION)
26.2	---
27	LNG VAPORIZATION PUMP
28	PDC
29	ESSENTIAL GENERATOR
30	MV TRANSFORMER
31	LV TRANSFORMER
32	WPG COOLING EXCHANGER
33	WPG STORAGE / EXPANSION TANK
34	WPG CIRCULATION PUMPS
35	PLANT INLET FILTER SEPARATOR
36	HEAVIES LOADING PUMP
37	MRL PROPANE VESSEL
38	MRL STORAGE VESSEL
39	MRL I-PENTANE STORAGE VESSEL
40	HEAVIES STORAGE VESSEL
41	MRL ETHYLENE STORAGE VESSEL
42	FUEL GAS FILTER
43	PROCESS FLARE
44	PROCESS FLARE KNOCKOUT DRUM
45	UTILITY ROOM
46	FEED / SENDOUT GAS METERING (BY PSE)
47	ODORIZATION SYSTEM (BY PSE)
48	LNG VAPORIZER
49	LNG LOADING ARM (HYLEBOS OPTION)
50	VAPOR RETURN ARM (HYLEBOS OPTION)
51	NITROGEN DEWAR / VAPORIZER (BY PSE)
52.1	MARINE IMPOUNDMENT SUMP (HYLEBOS OPTION)
52.2	PLANT IMPOUNDMENT SUMP
52.3	---
53	DRY CHEMICAL WHEELED UNITS
54	---
55	TRUCK LOADING STATION
56	TRUCK SCALE
57	PARKING AREA

ID	ITEM DESCRIPTION
58	ELECTRICAL SUBSTATION
59	FUTURE ELECTRICAL SUBSTATION
60	ROOF PLATFORM WITH IN-TANK PUMPS
61	UNDERGROUND LNG PIPELINE
62	LNG PIPELINE ASSEMBLY RAIL

0 50 100 150 200 250
SCALE: FEET

CLIENT DWG NO: –

NOTES

1. FIRE AND GAS SYSTEM CONTROLLER TO BE LOCATED IN CONTROL BUILDING (PT. 23).
2. FIRE AND GAS SYSTEM POWER SUPPLY CABINET AND BATTERIES TO BE LOCATED IN THE PDC (PT. 28). ADDITIONAL POWER SUPPLY REQ'D AT TOTE BUNKERING AREA.
3. SEE DRAWING 186512-000-IC-05-000002 FOR ADDITIONAL DETECTORS REQUIRED AT THE TOTE BUNKERING AREA.
4. FIRE ALARM PANEL FOR CONTROL,ADMINISTRATION,MAINTAINENCE BUILDING BY OTHERS.
5. THE HYLEBOS DOCK IS A FUTURE OPTION.

REFERENCE DRAWINGS	NO.	REVISION	DRAWN	CK'D	APPD	DATE
	-	-	-	-	-	-
	-	-	-	-	-	-
	-	-	-	-	-	-
	C	ISSUED PRELIMINARY.	EVO	SJP	-	24JUN15
	B	ISSUED FOR ESTIMATE.	VK	SJP	-	27MAR15
	A	ISSUED FOR ESTIMATE	JMG	SJP	-	13JUN13

DRAWN: JMG | CK'D: SJP | APPD: – | DATE: 13JUN13 | SCALE: AS SHOWN

FIRE & GAS DETECTION LAYOUT
TACOMA LNG
TACOMA, WA

FOR: PUGET SOUND ENERGY

PROJECT NO: 186512 | DWG NO: 186512-000-IC-05-000001 | REV: C

Form CMS-830-00-FM-02104 CBI ANSI D.dwg

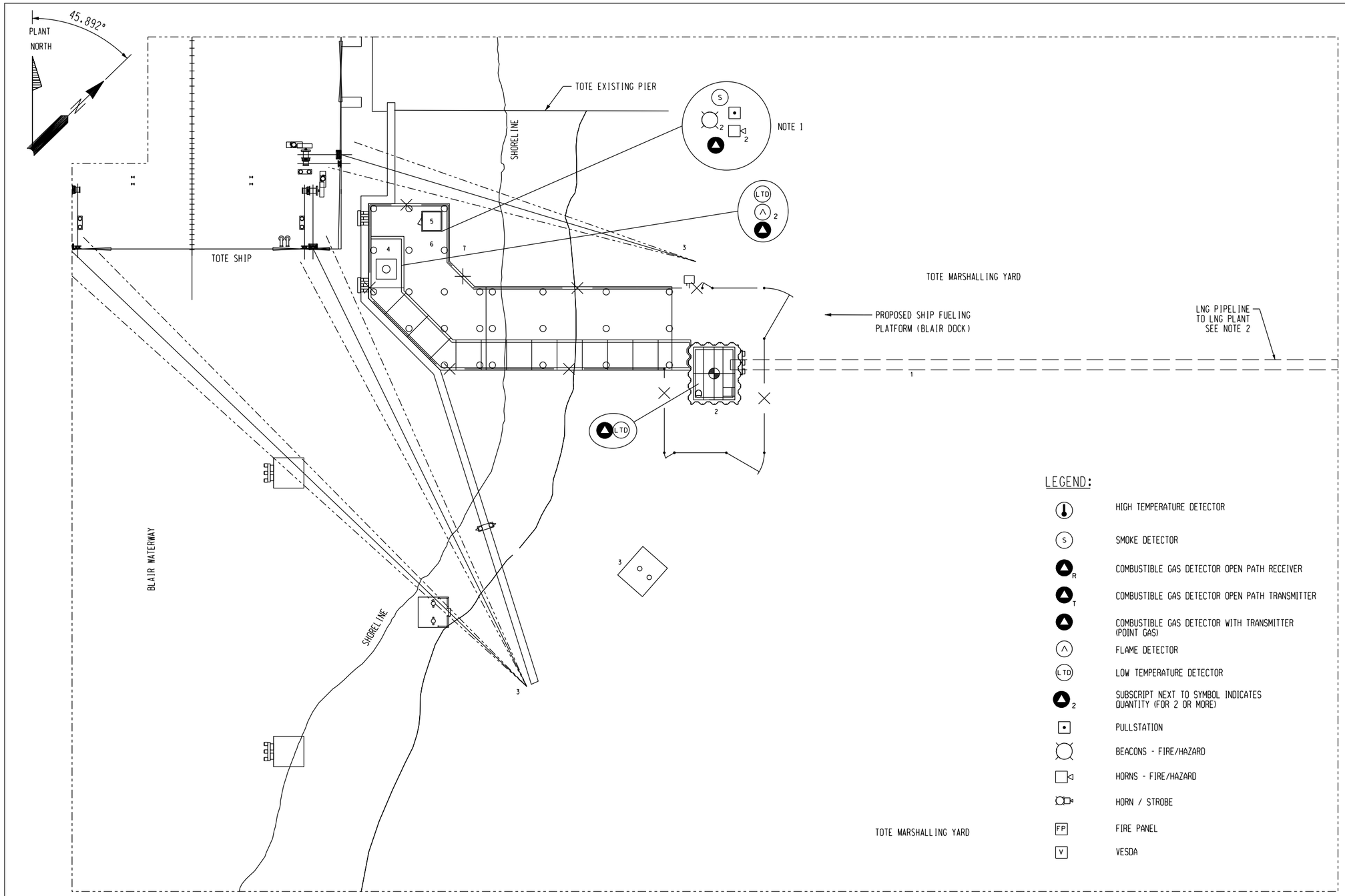

ID	ITEM DESCRIPTION
1	UNDERGROUND LNG PIPELINE
2	MARINE IMPOUNDMENT SUMP
3	MOORING POINTS (BY OTHERS)
4	LNG LOADING ARM
5	OPERATOR STATION
6	DRY CHEMICAL SKID
7	FUELING DOCK (BY OTHERS)
8	
9	
10	

0 25 50 75 100
SCALE: FEET

CLIENT DWG NO: –

NOTES

1. AT THE PDC (PT. 5), PROVIDE POWER SUPPLY AND BATTERIES FOR DETECTORS ON THIS DRAWING.
2. SEE DRAWING 186512-000-IC-05-000001 FOR LNG PLANT DETECTORS REQUIRED. DISTANCE FROM PT.2 TO LNG PLANT PROPERTY LINE IS APPROXIMATLY 700 FT.

REFERENCE DRAWINGS	NO.	REVISION	DRAWN	CK'D	APPD	DATE
	-	-	-	-	-	-
	-	-	-	-	-	-
	-	-	-	-	-	-
	-	-	-	-	-	-
	B	ISSUED PRELIMINARY.	EVO	SJP		24JUN15
	A	ISSUED FOR ESTIMATE.	VK	SJP		27MAR15

DRAWN: JMG | CK'D: SJP | APPD: – | DATE: 13JUN13 | SCALE: AS SHOWN

FIRE & GAS DETECTION LAYOUT
TACOMA LNG
TACOMA, WA

FOR: PUGET SOUND ENERGY

PROJECT NO: 186512 | DWG NO: 186512-000-IC-05-000002 | REV: B

Form: CMS-830-00-FM-02104 CBI ANSI D.dwg

H:/PROJECT/186512-TACOMA/2015 ONWARD/05 ENGINEERING/5.13 DRAWINGS/5.13.09 Instrumentation/186512-000-IC-015-000002.DGN
iDOCS FOLDER 14.5.5.1

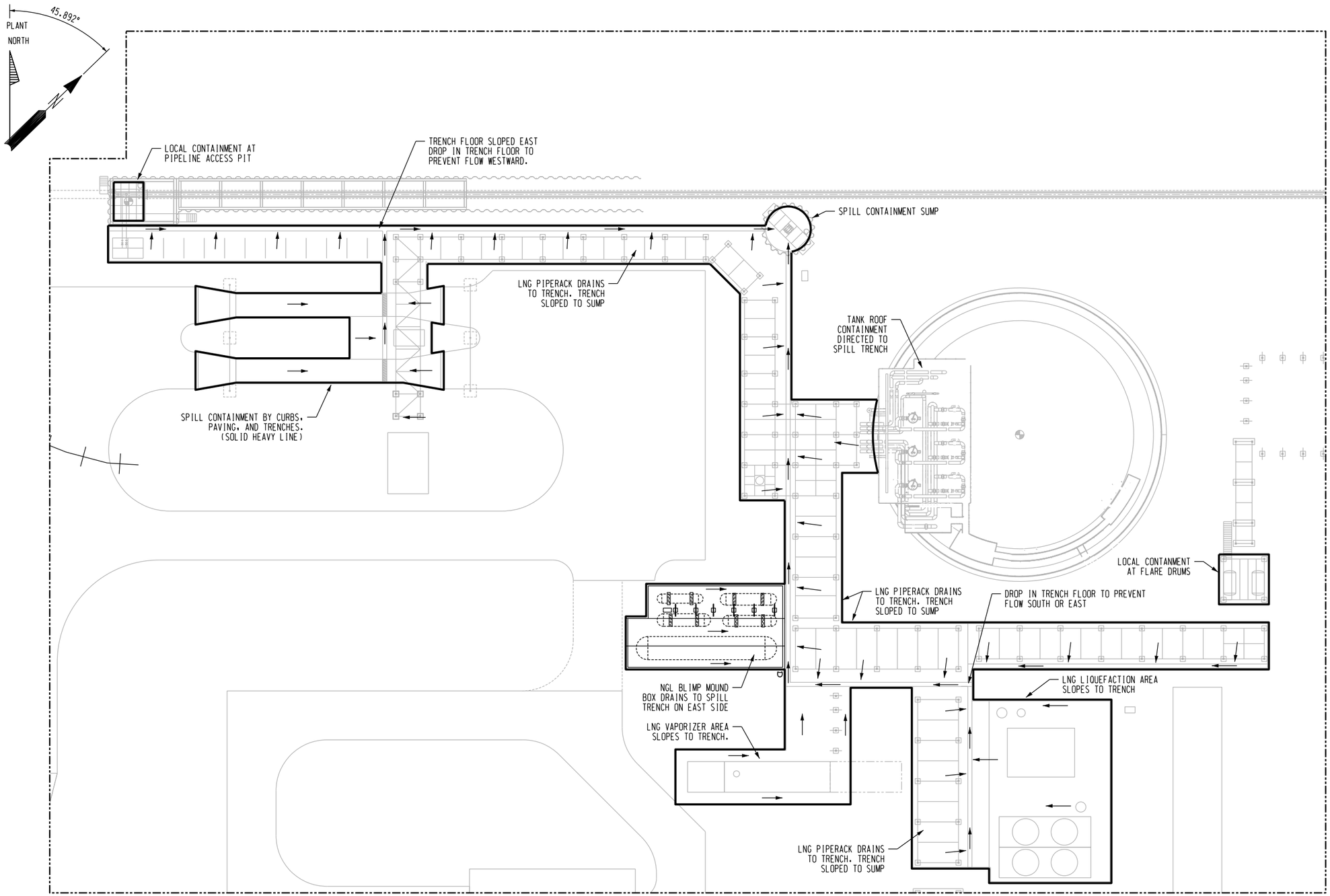

0 25 50 75 100 125
SCALE: FEET

CLIENT DWG NO: –

NOTES

CONTAINS CRITICAL ENERGY INFRASTRUCTURE INFORMATION
DO NOT RELEASE

REFERENCE DRAWINGS	NO.	REVISION	DRAWN	CK'D	APPD	DATE
	–	–	–	–	–	–
	–	–	–	–	–	–
	–	–	–	–	–	–
	–	–	–	–	–	–
	B	ISSUED PRELIMINARY	DAS	MES	MES	29JUN15
	A	ISSUED PRELIMINARY	DAS	MES	MES	21APR15

DRAWN: DAS | CK'D: MES | APPD: MES | DATE: 21APR15 | SCALE: AS SHOWN

SPILL CONTAINMENT PLAN
MAIN LNG PLANT

TACOMA LNG
TACOMA, WA

FOR: PUGET SOUND ENERGY

PROJECT NO: 186512 | DWG NO: 000-CV-08-000101 | REV: B

Form: CMS-830-00-FM-02104 CB1 ANSI D.dwg

H:/PROJECT/186512-TACOMA/2015 ONWARD/05 ENGINEERING/5.13 DRAWINGS/5.13.02 SITEWORK/186512-000-CV-08-000101.DGN iDOCS FOLDER 14.4.4.4.3

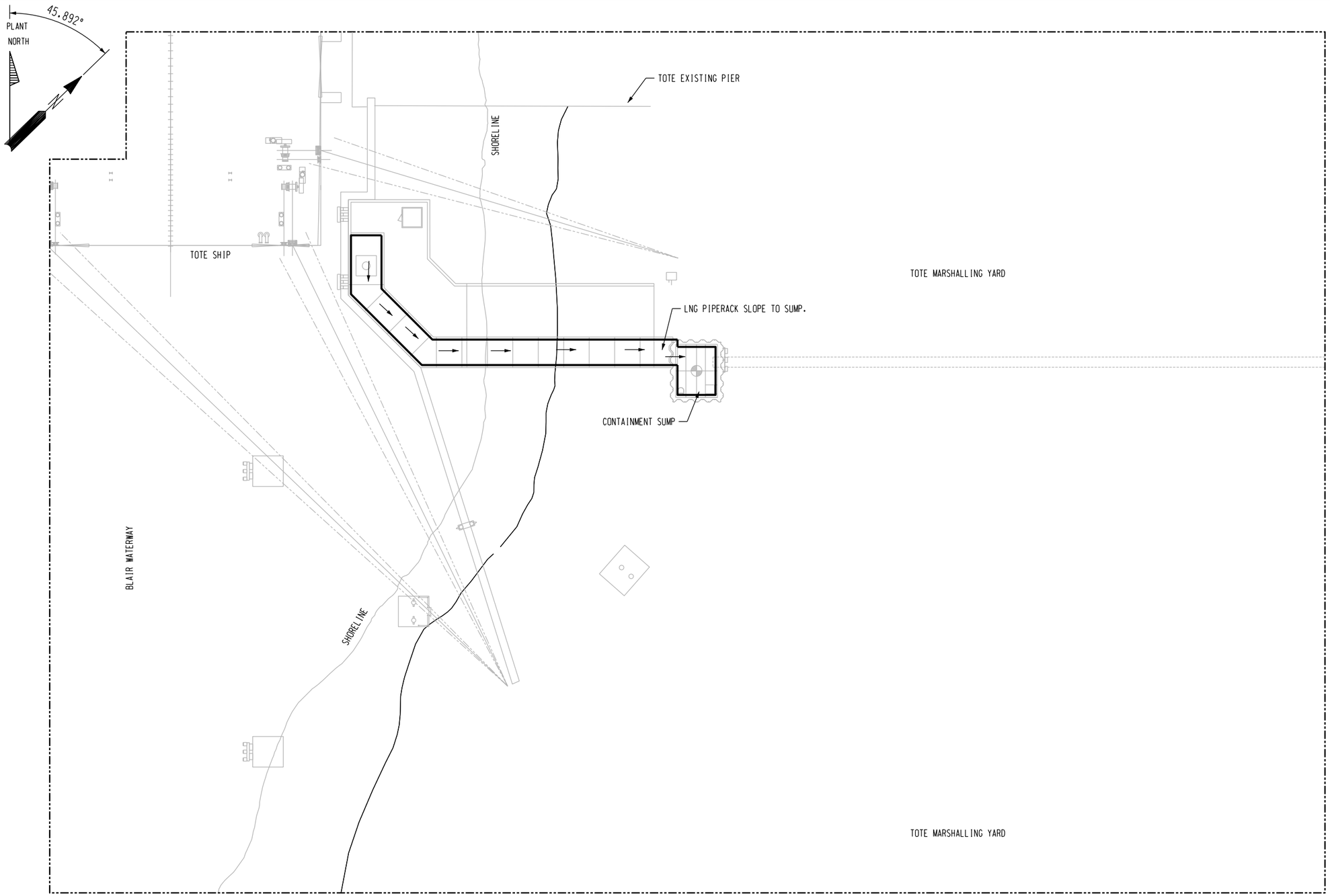

0 25 50 75 100
SCALE: FEET

CLIENT DWG NO: –

NOTES

CONTAINS CRITICAL ENERGY INFRASTRUCTURE INFORMATION
DO NOT RELEASE

REFERENCE DRAWINGS	NO.	REVISION	DRAWN	CK'D	APPD	DATE
	–	–	–	–	–	–
	–	–	–	–	–	–
	–	–	–	–	–	–
	–	–	–	–	–	–
	B	ISSUED PRELIMINARY	DAS	MES	MES	29JUN15
	A	ISSUED PRELIMINARY	DAS	MES	MES	21APR15

DRAWN: DAS | CK'D: MES | APPD: MES | DATE: 21APR15 | SCALE: AS SHOWN

SPILL CONTAINMENT PLAN
BLAIR DOCK (TOTE)

TACOMA LNG
TACOMA, WA

FOR: PUGET SOUND ENERGY

PROJECT NO: 186512 | DWG NO: 000-CV-08-000102 | REV: B

Form: CMS-830-00-FM-02104 CB1 ANSI D.dwg

H:/PROJECT/186512-TACOMA/2015 ONWARD/05 ENGINEERING/5.13 DRAWINGS/5.13.02 SITEWORK/186512-000-CV-08-000102.DGN iDOCS FOLDER 14.4.4.4.3

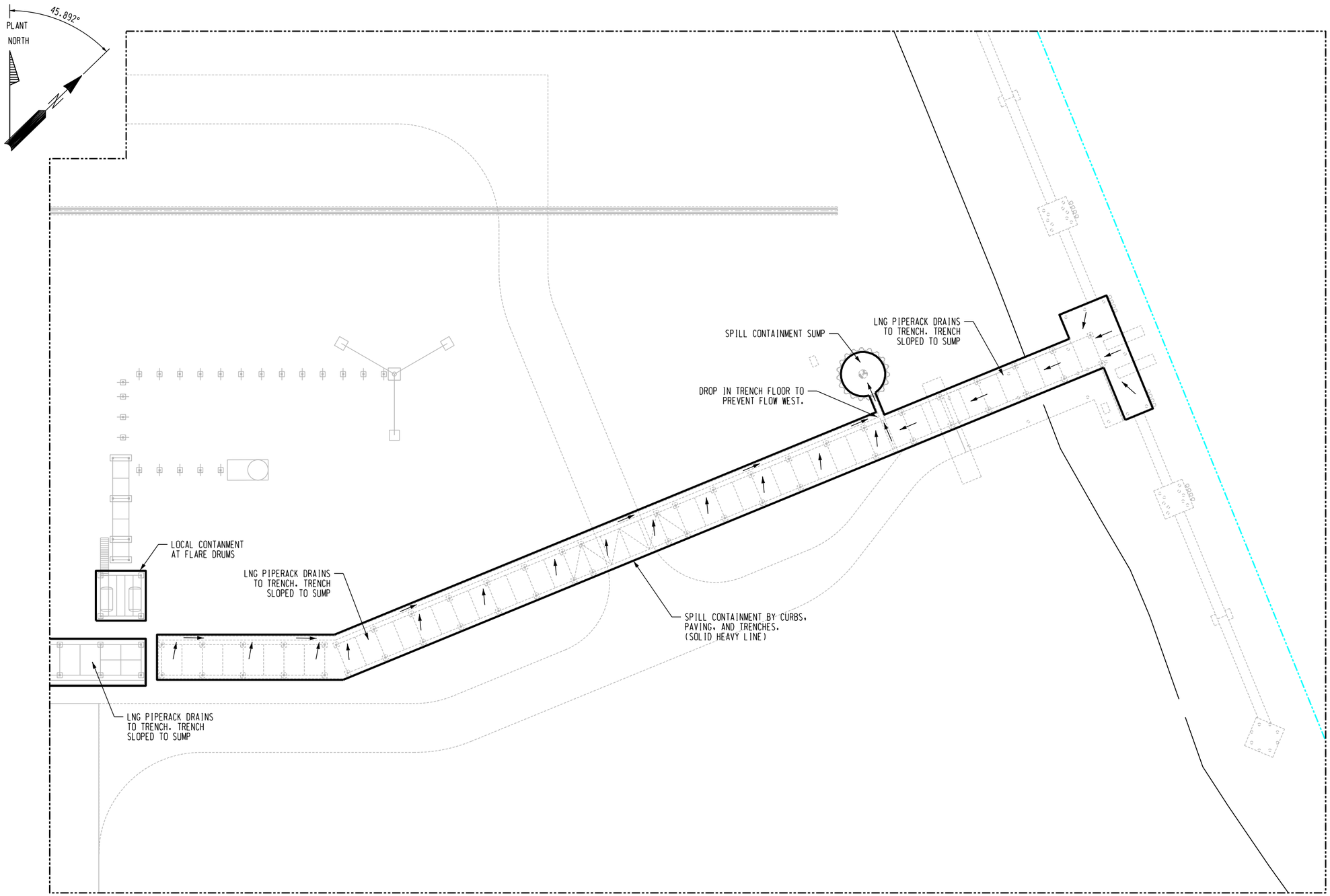

0 25 50 75 100 125
SCALE: FEET

CLIENT DWG NO: —

NOTES

CONTAINS CRITICAL ENERGY INFRASTRUCTURE INFORMATION
DO NOT RELEASE

REFERENCE DRAWINGS	NO.	REVISION	DRAWN	CK'D	APPD	DATE
	-	-	-	-	-	-
	-	-	-	-	-	-
	-	-	-	-	-	-
	-	-	-	-	-	-
	B	ISSUED PRELIMINARY	DAS	MES	MES	29JUN15
	A	ISSUED PRELIMINARY	DAS	MES	MES	21APR15

DRAWN: DAS | CK'D: MES | APPD: MES | DATE: 21APR15 | SCALE: AS SHOWN

SPILL CONTAINMENT PLAN
HYLEBOS DOCK

TACOMA LNG
TACOMA, WA

FOR: PUGET SOUND ENERGY

PROJECT NO: 186512 | DWG NO: 000-CV-08-000103 | REV: B

Forms CMS-830-00-FM-02104 CBI ANSI D.dwg

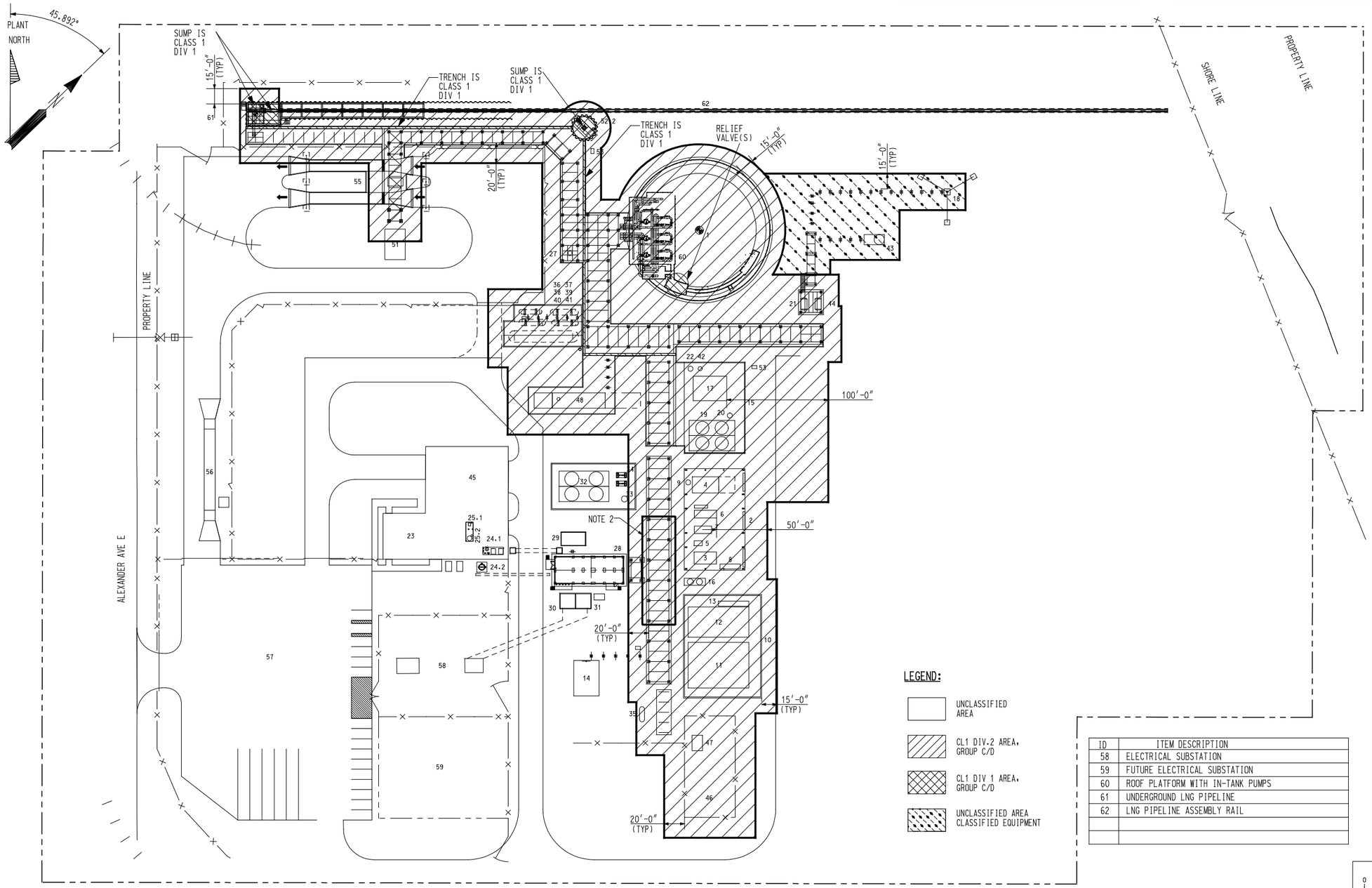

ID	ITEM DESCRIPTION
1	LNG STORAGE TANK
2	COMPRESSOR BUILDING
3	FEED GAS COMPRESSOR
4	MRL COMPRESSOR
5	MRL STORAGE COMPRESSOR
6	BOG COMPRESSOR
7	BOG HEAT EXCHANGER SKID
8	GAS CHROMATOGRAPH
9	MRL COMPRESSOR SUCTION SEPARATOR
10	PRETREATMENT AREA
11	AMINE PRETREATMENT SYSTEM
12	MOLE SIEVE PACKAGE
13	PRETREATMENT AFTERCOOLER
14	REGENERATION HEATER SKID
15	LIQUEFACTION AREA
16	FEED GAS COMPRESSOR AFTERCOOLER
17	LIQUEFACTION HEAT EXCHANGER
18	EMERGENCY FLARE
19	MRL CONDENSER
20	MRL RECEIVER
21	EMERGENCY FLARE KNOCK OUT DRUM
22	FUEL GAS SEPARATOR VESSEL
23	CONTROL, MAINTENANCE, ADMINISTRATION BUILDING
24.1	INSTRUMENT AIR SYSTEM
24.2	INSTRUMENT AIR RECEIVER
25.1	WATER TREATMENT UNIT
25.2	RO WATER STORAGE TANK
26.1	FIREWATER BOOST PUMP (HYLEBOS OPTION)
26.2	---
27	LNG VAPORIZATION PUMP
28	PDC
29	ESSENTIAL GENERATOR
30	MV TRANSFORMER
31	LV TRANSFORMER
32	WPG COOLING EXCHANGER
33	WPG STORAGE / EXPANSION TANK
34	WPG CIRCULATION PUMPS
35	PLANT INLET FILTER SEPARATOR
36	HEAVIES LOADING PUMP
37	MRL PROPANE VESSEL
38	MRL STORAGE VESSEL
39	MRL I-PENTANE STORAGE VESSEL
40	HEAVIES STORAGE VESSEL
41	MRL ETHYLENE STORAGE VESSEL
42	FUEL GAS FILTER
43	PROCESS FLARE
44	PROCESS FLARE KNOCKOUT DRUM
45	UTILITY ROOM
46	FEED / SENDOUT GAS METERING (BY PSE)
47	ODORIZATION SYSTEM (BY PSE)
48	LNG VAPORIZER
49	LNG LOADING ARM (HYLEBOS OPTION)
50	VAPOR RETURN ARM (HYLEBOS OPTION)
51	NITROGEN DEWAR / VAPORIZER (BY PSE)
52.1	MARINE IMPOUNDMENT SUMP (HYLEBOS OPTION)
52.2	PLANT IMPOUNDMENT SUMP
52.3	---
53	DRY CHEMICAL WHEELED UNITS
54	---
55	TRUCK LOADING STATION
56	TRUCK SCALE
57	PARKING AREA

ID	ITEM DESCRIPTION
58	ELECTRICAL SUBSTATION
59	FUTURE ELECTRICAL SUBSTATION
60	ROOF PLATFORM WITH IN-TANK PUMPS
61	UNDERGROUND LNG PIPELINE
62	LNG PIPELINE ASSEMBLY RAIL

0 50 100 150 200 250
SCALE: FEET

CLIENT DWG NO: —

NOTES

1. HAZARDOUS CLASSIFICATION PER NFPA-59A WITH GUIDANCE FROM NFPA-497 & API-500.
2. NO FLANGES OR INSTRUMENT TAPS NEAR ELECTRICAL PDC.
3. WORK WITH STANDARD DETAILS 186512-000-EL-10-000002 & 000003.
4. FOR PLOT PLAN, REFER TO DWG. 186512-000-PI-01-000001

REFERENCE DRAWINGS

NO.	REVISION	DRAWN	CK'D	APPD	DATE
–	–	–	–	–	–
–	–	–	–	–	–
–	–	–	–	–	–
C	ISSUED FOR ESTIMATE	GPB	MWV	MS	6/25/15
B	ISSUED FOR ESTIMATE	GPB	JTH	MWV	3/20/15
A	ISSUED FOR ESTIMATE	JMG	GPB	–	5/21/13

DRAWN: JMG | CK'D: GPB | APPD: MWV | DATE: 05/21/13 | SCALE: AS SHOWN

HAZARDOUS AREA PLAN

TACOMA LNG
TACOMA, WA

FOR: PUGET SOUND ENERGY

PROJECT NO: 186512 | DWG NO: 186512-000-EL-10-000001 | REV: C

Form CMS-650-00-FM-02104 CBI ANSI D.dwg

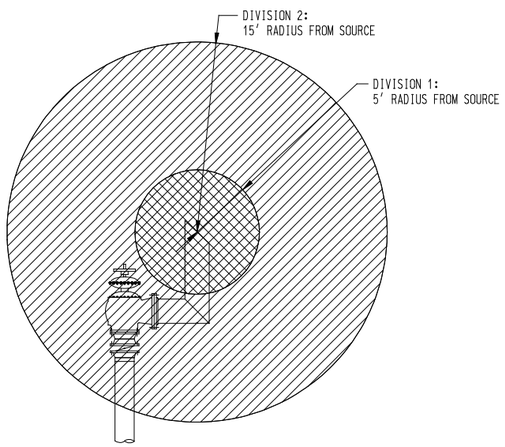

REF: MODIFIED VERSION OF NFPA 497 FIGURE 5.9.13

BLEEDS, DRIPS, VENTS AND DRAINS IN A NON-ENCLOSED ADEQUATELY VENTILATED AREA

DETAIL HA01

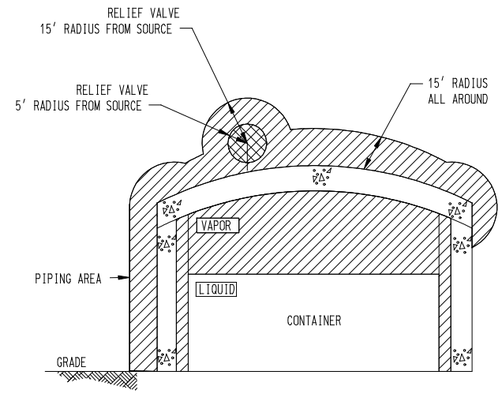

REF: MODIFIED VERSION OF NFPA 59A FIGURE 7.6.2(E)

LNG STORAGE TANK - CONCRETE ROOF AND OUTER WALL TANK

DETAIL HA02

SEE TABLE 7.6.2 NFPA 59A FOR CLASSIFICATION OF TANK CONTAINER

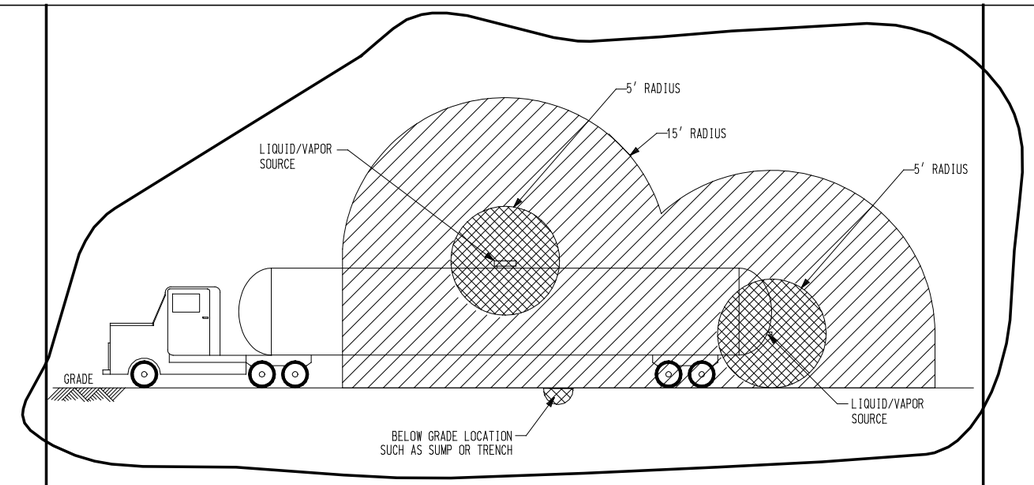

REF: MODIFIED VERSION OF APR RP 500 FIGURE 13

TANK TRUCK LOADING (VIA A CLOSED SYSTEM)

DETAIL HA03

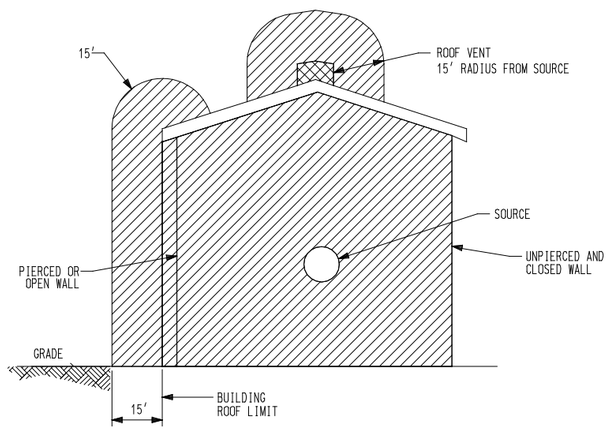

REF: MODIFIED VERSION OF API 500 FIGURE 105, APPLIED TO NFPA 59A STANDARDS

ADEQUATELY VENTILATED BUILDING - COMPRESSOR OR OTHER SOURCE HANDLING LIGHTER THAN AIR FLAMMABLE GAS

DETAIL HA04

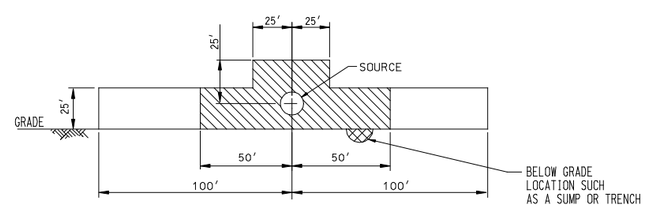

NOTE:
DISTANCES GIVEN ARE FOR TYPICAL REFINERY INSTALLATIONS:THEY MUST BE USED WITH JUDGEMENT, WITH CONSIDERATION GIVEN TO ALL FACTORS DISCUSSED IN THE TEXT. IN SOME INSTANCES, GREATER OR LESSER DISTANCES MAY BE JUSTIFIED.

FOR PEAK SHAVING PLANTS ADDITIONAL DIV 2 AREAS MAY BE REDUCED.

ADEQUATELY VENTILATED PROCESS LOCATION WITH HEAVIER-THAN-AIR GAS OR VAPOR SOURCE LOCATED ABOVE OR NEAR GRADE.

(MODIFIED VERSION OF API 500 FIGURE 20&21)

DETAIL HA05

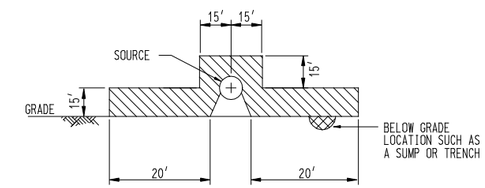

NOTE:
SHOWN FOR PIPING INSTALLED ABOVE GRADE. ALSO APPLIES TO BURIED PIPING WITH ABOVE GRADE VENTS, SUCH AS MOTOR

OUTDOORS-PIPING WITH VALVES,FITTINGS, FLANGES OR SIMILAR ACCESSORIES HANDLING LNG. ALSO COVERS SAMPLING SYSTEMS, INSTRUMENTATION AND INSTRUMENT-SIZED PUMPS.

(MODIFIED VERSION OF API 500 FIG. 96)

DETAIL HA06

NOTES

CLASS I DIVISION 1

CLASS I DIVISION 2

ADDITIONAL DIVISION 2 AREA SUGGESTED WHERE LARGE RELEASES OF VOLATILE PRODUCTS MAY OCCUR.

REFERENCE DRAWINGS	NO.	REVISION	DRAWN	CK'D	APPD	DATE
	B	ISSUED FOR ESTIMATE	GPB	JTH	JTH	25JUN15
	A	ISSUED FOR ESTIMATE	GJJ	WM	JTH	07JUNE13

DRAWN: GJJ | CK'D: WM | APPD: – | DATE: – | SCALE: NONE

CLIENT DWG NO: –

AREA CLASSIFICATION DETAILS

TACOMA LNG

FOR: –

PROJECT NO: 186512 | DWG NO: 186512-000-EL-10-000002 | REV: B

Form: CNS-630-00-FM-02104 CB& ANSI D.dwg

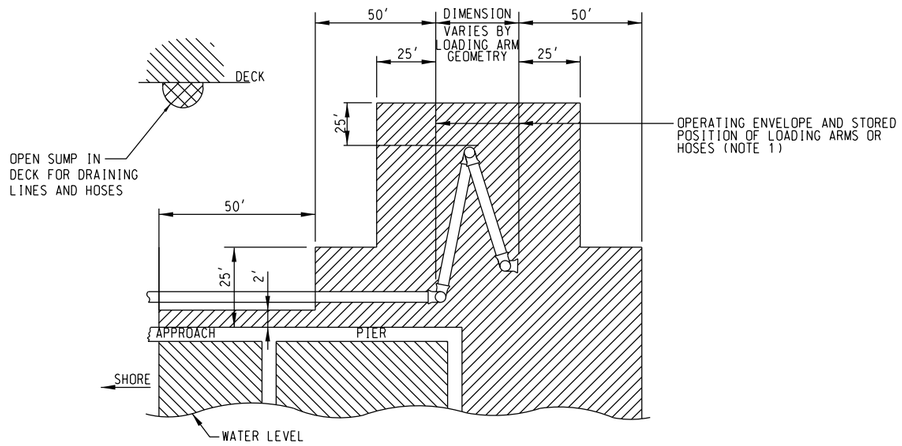

MARINE TERMINAL HANDLING LNG

(MODIFIED VERSION OF NFPA 59A FIG. 10.7.2(F))

DETAIL HA09

NOTES:

1.) THE "SOURCE OF VAPOR" IS THE OPERATING ENVELOPE AND STORED POSITION OF THE OUTBOARD FLANGE CONNECTION OF THE LOADING ARM (OR HOSE).

2.) THE BERTH AREA ADJACENT TO TANKER AND BARGE TANKS IS TO BE DIVISION 2 TO THE FOLLOWING EXTENT:

a) 25' HORIZONTALLY IN ALL DIRECTIONS ON THE PIER SIDE FROM THAT PORTION OF THE HULL CONTAINING CARGO TANKS.

b) FROM THE WATER LEVEL TO 25' ABOVE THE CARGO TANKS AT THEIR HIGHEST POSITION.

3.) ADDITIONAL LOCATIONS MAY HAVE TO BE CLASSIFIED AS REQUIRED BY THE PRESENCE OF OTHER SOURCES OF FLAMMABLE LIQUIDS ON THE BERTH, OR BY THE REQUIREMENTS OF THE COAST GUARD OR OTHER AUTHORITIES HAVING JURISDICTION.

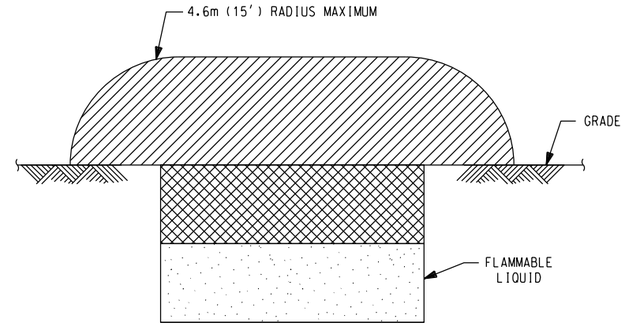

OPEN SUMP IN NON-ENCLOSED ADEQUATELY VENTILATED AREA

(API RP 500 FIGURE 57 MODIFIED)

DETAIL HA10

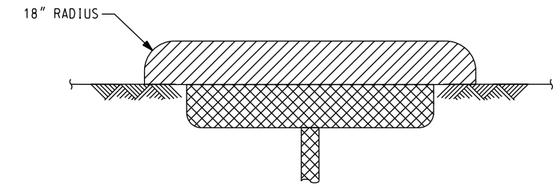

NOTE:
TYPE 3 OPEN DRAINS ARE OPEN DRAINS THAT CAN ALLOW RELEASES (THROUGH DRAIN OPENINGS) OF LIGHTER-THAN-AIR FLAMMABLE GASES OR VAPORS AT ATMOSPHERIC PRESSURE.

TYPE 3 OPEN DRAIN SYSTEM IN NON-ENCLOSED HAZARDOUS AREA

(API RP 500 FIGURE 60)

DETAIL HA11

PRELIMINARY

CLIENT DWG NO: –

NOTES

CLASS I DIVISION 1

CLASS I DIVISION 2

ADDITIONAL DIVISION 2 AREA SUGGESTED WHERE LARGE RELEASES OF VOLATILE PRODUCTS MAY OCCUR.

REFERENCE DRAWINGS	NO.	REVISION	DRAWN	CK'D	APPD	DATE
	A	ISSUED FOR ESTIMATE	GJJ	WM	JTH	07JUNE13

DRAWN: GJJ | CK'D: WM | APPD: – | DATE: – | SCALE: NONE

AREA CLASSIFICATION DETAILS

TACOMA LNG

FOR: –

PROJECT NO: 186512 | DWG NO: 186512-000-EL-10-000003 | REV: A

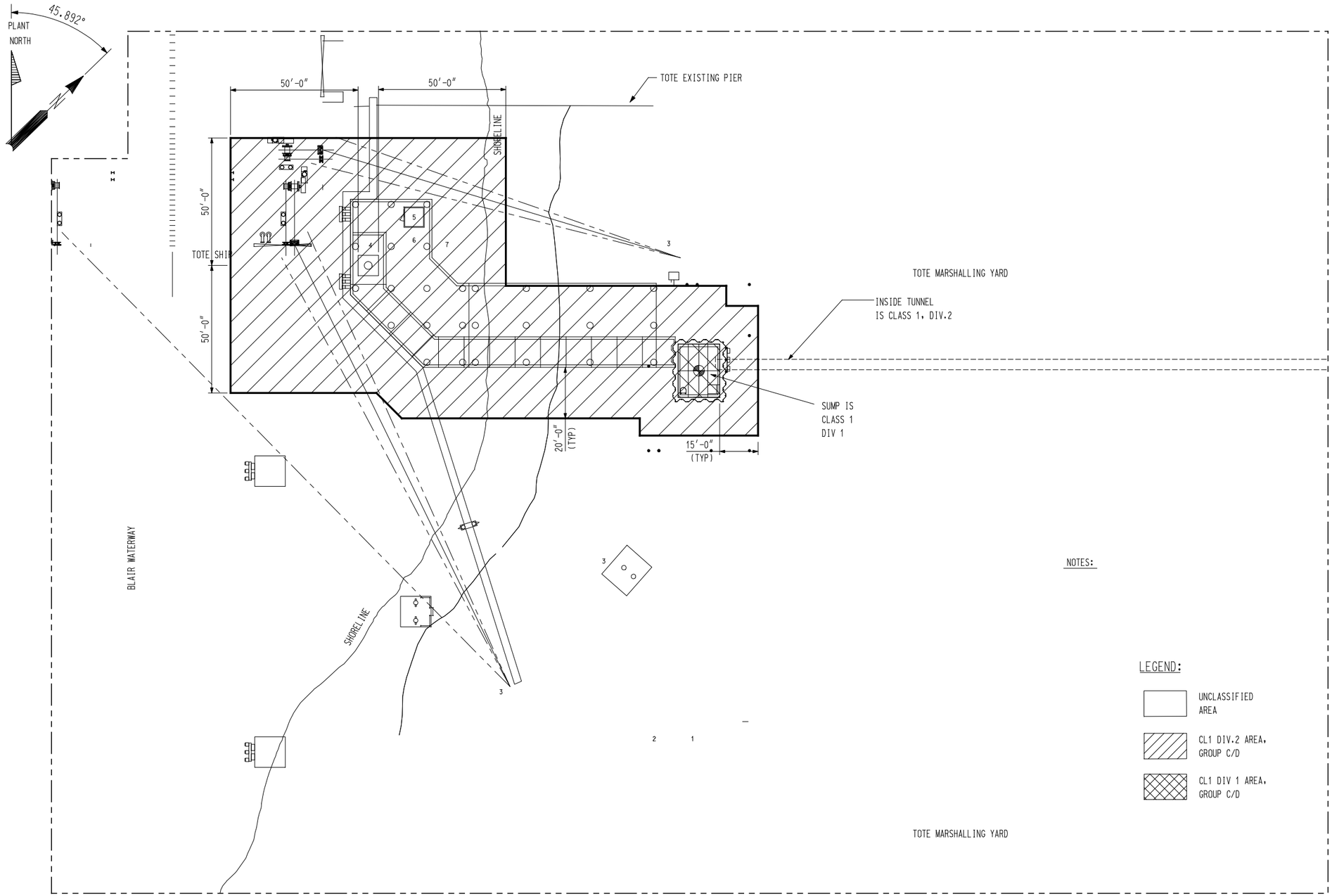

NOTES:

LEGEND:

- UNCLASSIFIED AREA
- CL1 DIV.2 AREA, GROUP C/D
- CL1 DIV 1 AREA, GROUP C/D

ID	ITEM DESCRIPTION
1	UNDERGROUND LNG PIPELINE
2	MARINE IMPOUNDMENT SUMP
3	MOORING POINTS (BY OTHERS)
4	LNG LOADING ARM
5	OPERATOR STATION
6	DRY CHEMICAL SKID
7	FUELING DOCK (BY OTHERS)
8	
9	
10	

0 25 50 75 100
SCALE: FEET

CLIENT DWG NO: —

NOTES

1. HAZARDOUS CLASSIFICATION PER NFPA-497 & API-500.
2. WORK WITH STANDARD DETAILS 186512-000-EL-10-000002 & 000003.
3. FOR PLOT PLAN, REFER TO DWG. 186512-000-PI-01-000001

REFERENCE DRAWINGS	NO.	REVISION	DRAWN	CK'D	APPD	DATE
	–	–	–	–	–	–
	–	–	–	–	–	–
	–	–	–	–	–	–
	–	–	–	–	–	–
	B	ISSUED FOR ESTIMATE	GPB	MWV	MS	6/25/15
	A	ISSUED FOR ESTIMATE	GPB	JTH	MWV	3/20/15

DRAWN: GPB | CK'D: JTH | APPD: MWV | DATE: 3/20/15 | SCALE: AS SHOWN

HAZARDOUS AREA PLAN
BLAIR DOCK (TOTE)

TACOMA LNG
TACOMA, WA

FOR: PUGET SOUND ENERGY

PROJECT NO: 186512 | DWG NO: 186512-000-EL-10-000004 | REV: B

Form CNG-630-00-FM-02104 CB1 ANSI D.dwg